AVI

Advanced Video Imaging

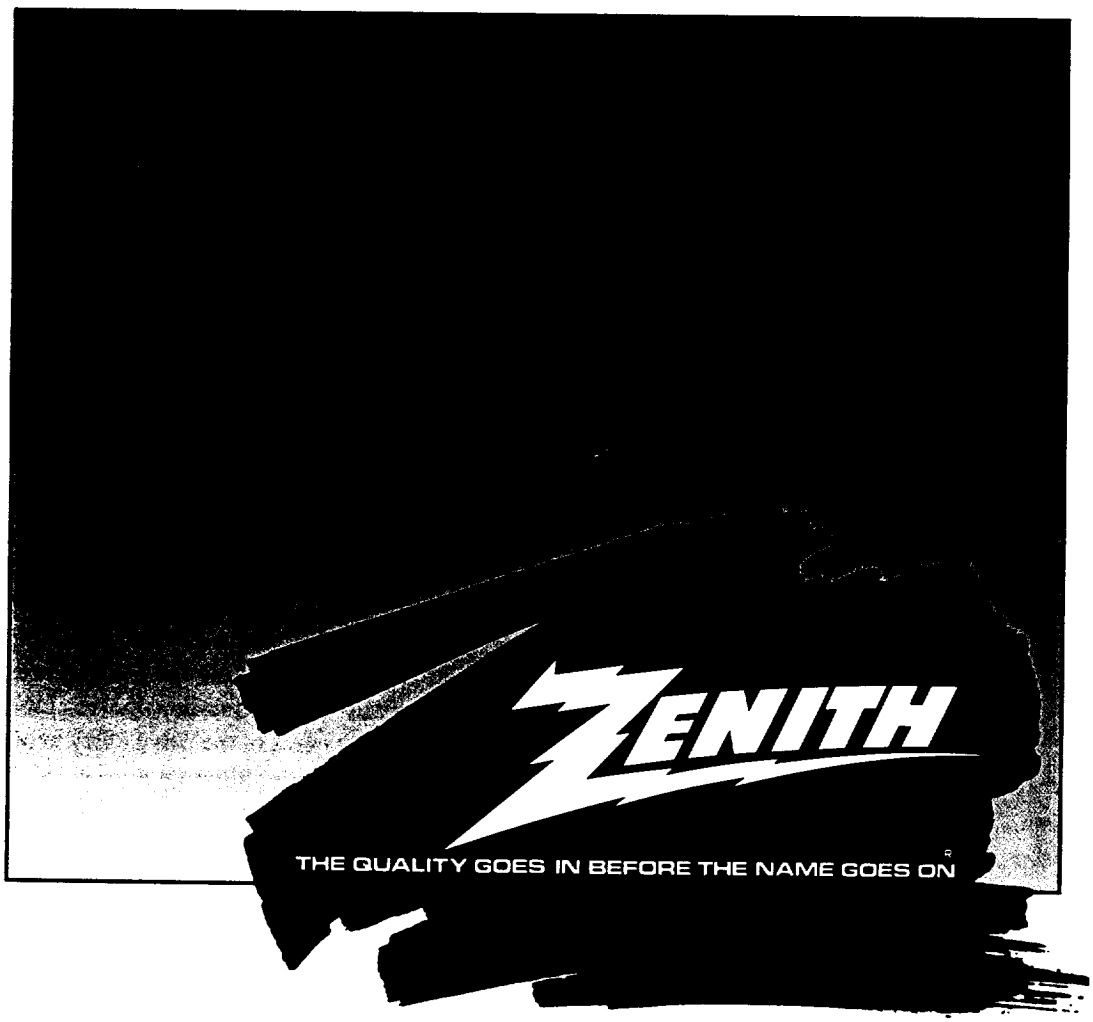

OPERATING GUIDE AND WARRANTY

MTS Stereo Color TV
with
Surround Sound
Closed Captions
Remote Control

recycled paper

Return the Product Registration Card, and your TV could be free!

WARNING

RISK OF ELECTRIC SHOCK
DO NOT OPEN

WARNING: TO REDUCE THE RISK OF ELECTRIC SHOCK DO NOT REMOVE COVER (OR BACK). NO USER SERVICEABLE PARTS INSIDE. REFER TO QUALIFIED SERVICE PERSONNEL.

TO PREVENT FIRE OR SHOCK HAZARDS, DO NOT EXPOSE THIS PRODUCT TO RAIN OR MOISTURE.

The lightning flash with arrowhead symbol, within an equilateral triangle, is intended to alert the user to the presence of uninsulated "dangerous voltage" within the product's enclosure that may be of sufficient magnitude to constitute a risk of electric shock to persons.

The exclamation point within an equilateral triangle is intended to alert the user to the presence of important operating and maintenance (servicing) instructions in the literature accompanying the appliance.

Safety Tips

Refer to the "Safety Tips" booklet that came with your product for important safety considerations.

Note to Cable TV System Installer

This reminder is provided to call the cable TV system installer's attention to Article 820-40 of the NEC that provides guidelines for proper grounding and, in particular, specifies that the cable ground shall be connected to the grounding system of the building, as close to the point of the cable entry as practical.

Power-Cord Polarization

This product is equipped with a polarized alternating-current line plug (a plug having one blade wider than the other.) This plug will fit into the power outlet only one way. This is a safety feature. If you are unable to insert the plug fully into the outlet, try reversing the plug. If the plug should still fail to fit, contact your electrician to replace your obsolete outlet. Do not defeat the safety purpose of the polarized plug.

CAUTION

To prevent electric shock, match wide blade of plug to wide slot, fully insert.

ATTENTION

Pour éviter les chocs électriques, introduire la lame la plus large de la fiche dans la borne correspondante de la prise et pousser jusqu'au fond.

Copyright © Zenith Electronics Corporation 1993

CONTENTS

INTRODUCTION
Welcome ii
Installation Considerations ii

CONNECTIONS FOR YOUR TV
Connection Center On Back Of TV 1-1
Input Sources For Your TV 1-2
Step 1. Make Basic Connections To TV 1-2
Step 2. Make VCR Connections To TV 1-4
Step 3. Make Super-VHS Connections To TV 1-5
Step 4. Make Stereo Audio Connections To TV 1-6
Step 5. TV Connections to External Speakers 1-7
Step 6. TV Connections to Surround Sound Speakers 1-7
Step 7. A/V Connections To Front A/V Jacks 1-8

THE FIRST TIME YOU OPERATE YOUR TV
Step 1. Connect The Power 2-1
Step 2. Turn On TV 2-1
Step 3. Select Your Viewing Source 2-1
Step 4. Use Auto Ch. Search 2-1
Step 5. Use Other Options 2-2

OPERATING YOUR TV
Basic TV Operations 3-1
Sleep Timer 3-1

GETTING TO KNOW YOUR TV
Front Panel Controls 4-1

GETTING TO KNOW YOUR REMOTE CONTROL
Operation 5-1
Choose The Operating Mode 5-1
TV Operations 5-2
VCR Operations 5-3
Cable-TV Operations 5-4
Preparation For Use 5-5
Installing Batteries 5-5

ON-SCREEN MENUS
Available Menus 6-1
Summary Of Menu Items 6-1
Basic Menu Operation 6-2

SOURCE MENU
To Select A Source 7-1

SETUP MENU
Auto Ch. Search 8-1
CH. Add/Del 8-2
CH. Labels 8-2
Tuning Band 8-3
Auto Fine Tune 8-3
Clock Set 8-4
Captions 8-4
CH. Background 8-5
Setup Menu With Auxiliary
Video Source Selected 8-6

AUDIO MENU
General Information 9-1
Bass 9-1
Treble 9-1
Balance 9-1
Audio 9-2
SEQ 9-2
Surround 9-2
Audio Selection Considerations 9-3

VIDEO MENU
General Information 10-1
Contrast 10-1
Brightness 10-1
Color 10-1
Tint 10-1
Sharpness 10-1
Color Temp 10-1
Video Filter 10-1
Auto Flesh 10-1
Picture Pref 10-1

PROGRAMMING THE REMOTE CONTROL
Introduction 11-1
TV, VCR And Cable-TV Operating Codes 11-2

MAINTENANCE AND TROUBLESHOOTING
Caring For Your TV 12-1
Extended Absence 12-1
TV Picture Interference 12-1
Before Calling For Service 12-2
VCR Operational Mode Charts 12-3

Product Registration Card
Recommended Accessories For Your Television
Your Zenith Warranty

INTRODUCTION

WELCOME

Welcome into the family of Zenith Color Television owners. This guide provides instructions on how to operate your new TV. It is supplemented by a booklet containing Safety Tips. We urge you to read these publications carefully so that you will receive full enjoyment from your new Zenith TV for many years to come.

Your new Zenith TV has been designed and built to give you the very best in quality, features and performance. There are many regional Zenith distributors and thousands of distributor-approved Zenith service centers throughout the U.S. and Canada who can attend promptly and effectively to ordinary service needs.

If you should have an unusual performance or service problem that cannot be satisfactorily resolved by your distributor-approved Zenith service center, contact the regional Zenith distributor in your area, or write:

Zenith Electronics Corporation
Customer Service Department
1900 N. Austin Avenue
Chicago, Illinois 60639-5079
Telephone: (312) 745-5152
Mon-Fri, 8:00 a.m. - 4:30 p.m. Central Time

Send the model number, serial number, and date of purchase or original installation, with a full explanation of the problem and the service history. We will welcome the opportunity to look into your specific question or problem and to be of assistance in resolving it promptly.

The model and serial numbers of your new TV are located on the back of the TV cabinet. For your future convenience and protection, we suggest that you record these numbers here:

Model No. _____

Serial No. _____

INSTALLATION CONSIDERATIONS

Before you install your TV...

Ventilation – Proper ventilation keeps your TV running cool. Air circulates through perforations in the back and bottom of the cabinet. Do not block these vents or you will shorten the life of your TV.

Power Source – Your TV is designed to operate on normal household current, 120 volt 60 Hertz AC. Do not attempt to operate it on DC current.

Power Cord – Your power cord has a polarized plug as required by Underwriters' Laboratories. It has one regular blade and one wide blade and fits only one way into a standard electrical outlet. If the blades will not enter either way, your outlet is very old and non-standard. A new outlet should be installed by a qualified electrician.

Safe Operation – Your TV is manufactured and tested with your safety in mind. However, unusual stress caused by dropping or mishandling, exposure to flood, fire, rain or moisture, or accidental spilling of liquids into the TV, can result in potential electrical shock or fire hazards. If this happens, have your TV checked by a service technician before using it again.

Please read and observe each safety point in the "Safety Tips" folder when installing and using your TV.

FIXED PATTERN DISPLAY CAUTION – If you use your TV for video games, teletext or other fixed displays, avoid setting the BRIGHTNESS control for an excessively bright picture. A bright, fixed pattern, if used for long periods of time, can result in a permanent imprint on the TV picture tube. You can reduce this possibility by alternating the use of the fixed pattern display with normal TV picture viewing, by turning down the CONTRAST control for sustained fixed pattern use, and by turning off the fixed pattern display when not in use.

PLUGGING IN YOUR TV – Be sure to plug your TV into an "unswitched" AC power source. The "switched" AC outlets found on some video equipment will not continue supplying power to the TV once the equipment is turned off. If the power to the TV is interrupted, you will have to reset the clock in the TV to the current time.

CONNECTIONS FOR YOUR TV

CONNECTION CENTER ON BACK OF TV

The connection center on the back of your TV will be similar to the one shown below. These connections allow three basic "types" of video inputs to provide for up to 5 different viewing sources to your TV.

Using these five connections, you can choose from a variety of antenna sources and audio/video components for your viewing pleasure. Note that the correct source must be selected from the SOURCE MENU (as described later in this booklet) to watch TV. Refer to the illustration while reading the following descriptions.

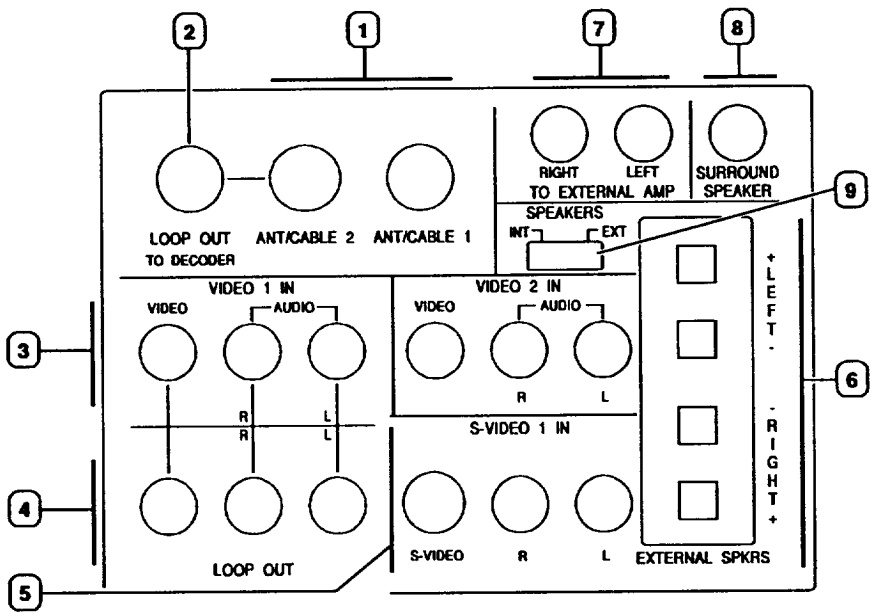

1. **ANT/CABLE 1 or ANT/CABLE 2**
   Use one of these jacks for 75-ohm, antenna-type signal connections to your TV. Attach your antenna, cable-TV line, or other video component to either of these jacks. The input may come from an outdoor or master antenna, cable-TV decoder box, or the 75-ohm TV output from a VCR.
2. **LOOP OUT**
   Use this output jack to route the cable-TV signal back to the decoder supplied by your cable-TV system. When connected as shown in Steps 1C and 1D, you can view basic (unscrambled) cable channels by selecting the ANT/CABLE 2 source or premium (scrambled) cable channels tuned by the decoder by selecting ANT/CABLE 1 source.
3. **VIDEO 1 IN or VIDEO 2 IN**
   Video and audio (Base Band) input from VCR or other video component (Disc Player). Gives improved picture quality performance over that obtained through the ANT/CABLE jacks.
4. **VIDEO 1 LOOP OUT**
   Use these jacks to send the incoming video and audio signals (from VIDEO 1 IN) to another component such as a second VCR or TV monitor.
5. **S-VIDEO 1 IN**
   Input from a Super-VHS VCR. Both left and right audio jacks are provided as well as the S-Video (Y-C) jack.
6. **EXTERNAL SPEAKERS**
   Terminals for connecting external left and right stereo speakers.
7. **EXTERNAL AMP**
   Standard Phono Jack connectors for output to an external amplifier.
8. **SURROUND SPEAKER**
   Standard Phono Jack connector for output to optional surround sound speakers.
9. **SPEAKERS INT/EXT**
   Use this switch to turn the TV's internal speakers OFF or ON when an external audio amplifier or external speakers are connected to the TV. (See steps 4 and 5.)

CONNECTIONS FOR YOUR TV

INPUT SOURCES FOR YOUR TV

Your TV has five input connection areas: ANT/CABLE 1, ANT/CABLE 2, VIDEO 1 IN, VIDEO 2 IN, and S-VIDEO 1 IN. (In addition, some models have a sixth input area on the front of the TV.) These five inputs allow you to connect five different "signal sources" to your TV at the same time. The "Signal Source" refers to the item supplying the picture and sound to your TV.

The most common "signal source" is your outdoor antenna (or master antenna) or a cable-TV system. This type of signal is called a radio frequency (RF) source, and is connected to the one of the ANT/CABLE jacks.

Another common "signal source" is the audio and video (A/V) from a VCR or video disc player. This type of signal is called base band (basic video and audio), and is connected to one of the VIDEO IN connections.

A third "signal source" is the input from a Super-VHS VCR. If you have a S-VHS VCR, use the S-VIDEO 1 IN video and audio jacks to connect it to the TV.

To use any of these video/audio input sources, you must access the SOURCE Menu and select the "source" which corresponds to the input jacks being used. Refer to the "SOURCE MENU" in this operating guide.

STEP 1. MAKE BASIC CONNECTIONS TO TV

There are four basic hook ups to your TV; outdoor antenna (or master antenna) with or without VCR, and cable-TV system with or without VCR. Select the hook up that best fits your needs. See the following diagrams.

Your connection is made to one of the ANT/CABLE jacks on the back of the TV. These jacks accept 75-ohm cable terminated in an F-type male connector. You may want to do the hook-up yourself, or call a TV service technician, or a cable company.

A. Antenna Connection to TV

If You Have a Round Antenna Wire:

Connect the 75-ohm round antenna wire to either the ANT/CABLE 1 or ANT/CABLE 2 jack on the TV.

If You Have a Flat, Twin-Lead Antenna Wire:

Use the 300/75 ohm adapter included with the TV. Attach the ends of the wire to the adapter and plug it into either the ANT/CABLE 1 or the ANT/CABLE 2 jack.

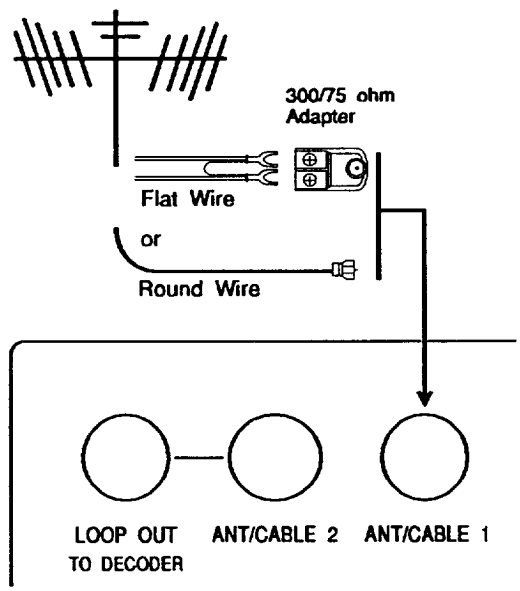

B. Antenna Connection to VCR and TV

1. **Antenna Hook Up**
   Connect the 75-ohm round antenna wire into ANTENNA IN jack on your VCR.
2. **VCR Hook Up**
   Connect the ANTENNA OUT wire from VCR into either the ANT/CABLE 1 or the ANT/CABLE 2 jack on the TV.

> **NOTE:** For connections A and B, the antenna may be connected into the ANT/ CABLE 2 jack, however, connecting to the ANT/CABLE 1 jack may produce a better picture in weak signal areas.

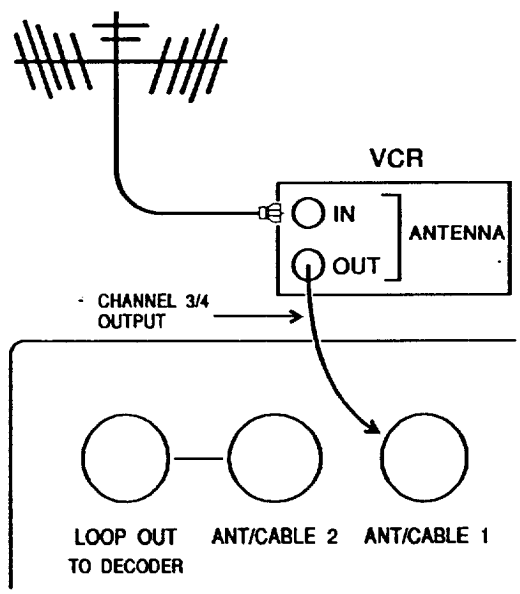

CONNECTIONS FOR YOUR TV

STEP 1. MAKE BASIC CONNECTION TO TV (CONTINUED)

C. Cable-TV Connection to TV

If You Do Not Have a Converter/Decoder Box:

1. Connect the 75-ohm cable-TV input directly to the ANT/CABLE 1 jack.

If You Have a Converter/Decoder Box:

1. Connect the 75-ohm cable-TV input to the ANT/CABLE 2 jack on the TV.
2. Connect a 75-ohm cable from the LOOP OUT jack on the TV to the IN jack on the decoder/converter.
3. Connect a 75-ohm cable from the OUT jack on the decoder/converter to the ANT/CABLE 1 jack on the TV.

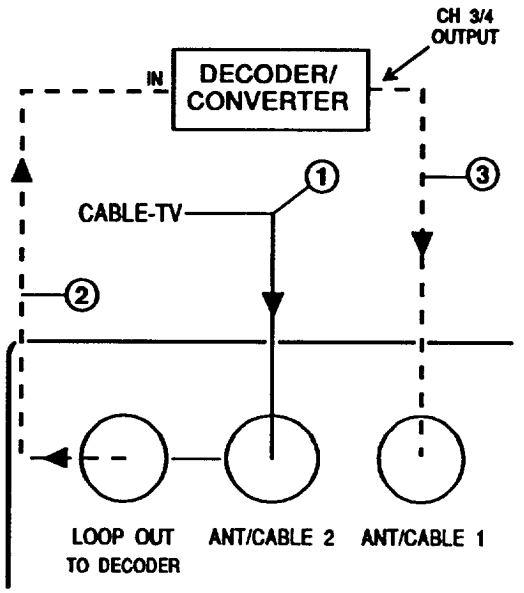

D. Cable-TV Connection to VCR and TV

If You Do Not Have a Converter/Decoder Box:

1. Connect the 75-ohm cable-TV input directly to the ANT/CABLE 2 jack.
2. Connect a 75-ohm cable from the LOOP OUT jack on the TV to the antenna IN jack on the VCR.
3. Connect a 75-ohm cable from the antenna OUT jack on the VCR to the ANT/CABLE 1 jack on the TV.

If You Have a Converter/Decoder Box:

1. Connect the 75-ohm cable-TV input directly to the ANT/CABLE 2 jack.

2a. Connect a 75-ohm cable from the LOOP OUT jack on the TV to the IN jack on the decoder/converter.

2b. Connect a 75-ohm cable from the OUT jack on the decoder/converter to the antenna IN jack on the VCR.

3. Connect a 75-ohm cable from the antenna OUT jack on the VCR to the ANT/CABLE 1 jack on the TV.

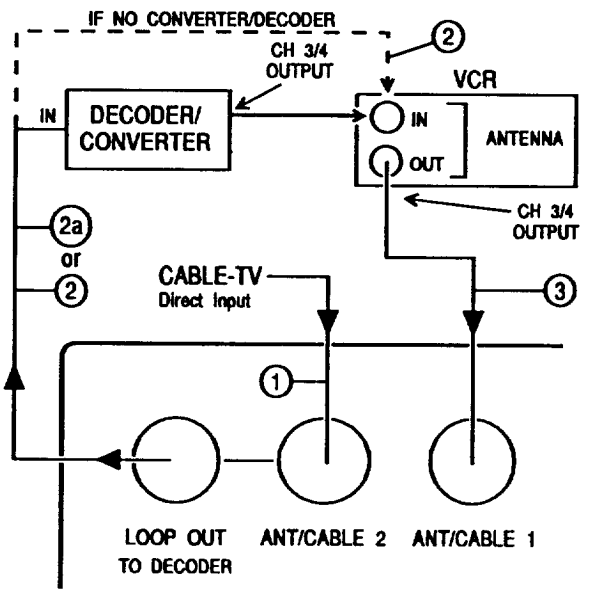

NOTE:
If you have a stereo VCR, you must make the A/V connections described in Step 2 for you to hear stereo sound while playing a tape.

CONNECTIONS FOR YOUR TV

STEP 2. MAKE VCR CONNECTIONS TO TV

STEREO VCR

Connections: You must make the following connections to obtain stereo sound from your TV while playing a stereo video tape.

1. Connect the VCR Right/Left AUDIO OUTPUT into the VIDEO 1 IN Right and Left audio jacks on the TV.
2. Connect VCR VIDEO OUTPUT into the VIDEO 1 IN VIDEO jack on TV.

Operation: To use these VCR connections, VIDEO 1 must be selected from the SOURCE MENU. To select this source, refer to the SOURCE MENU section of this booklet. For improved picture quality, place VCR/TV switch on your VCR in the VCR position.

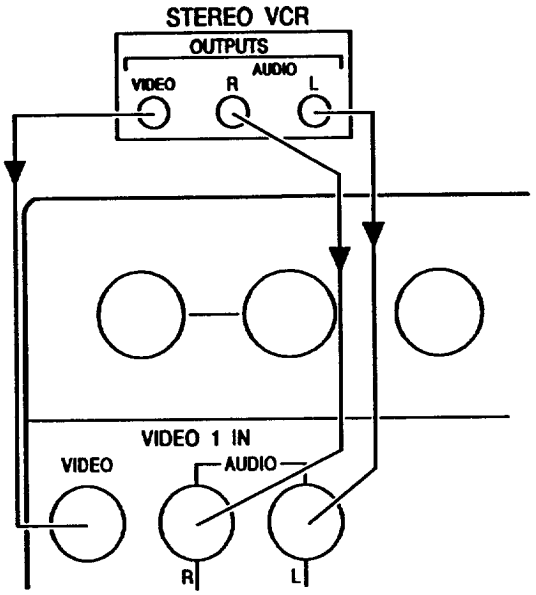

MONAURAL VCR

Connections:

1. To get monaural sound from both TV speakers, use a Y-adapter audio cable (customer supplied) to route VCR AUDIO OUT to the VIDEO 1 IN Right and Left audio jacks on the TV.
2. Connect VCR VIDEO OUTPUT into the VIDEO 1 IN VIDEO jack on TV.

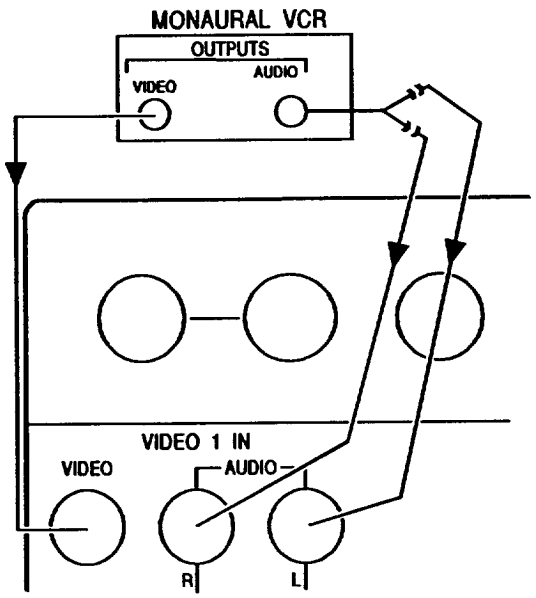

CONNECTIONS FOR YOUR TV

STEP 3. MAKE SUPER-VHS VCR CONNECTIONS TO TV

In addition to the video connections already described, your TV is also capable of using a Super-VHS VCR as a video source. Refer to the illustration below.

1. Connect the Y/C-VIDEO Output cable from the Super-VHS VCR to the S-VIDEO Y-C jack on the TV.
2. Connect the Right and Left AUDIO Output from the Super-VHS VCR to the Right and Left (Audio) S-VIDEO INPUT jacks on the TV. (These audio connections must be made in order to receive sound from the VCR.)

NOTE: Make sure S-VIDEO 1 is selected in the SOURCE Menu to view this source.

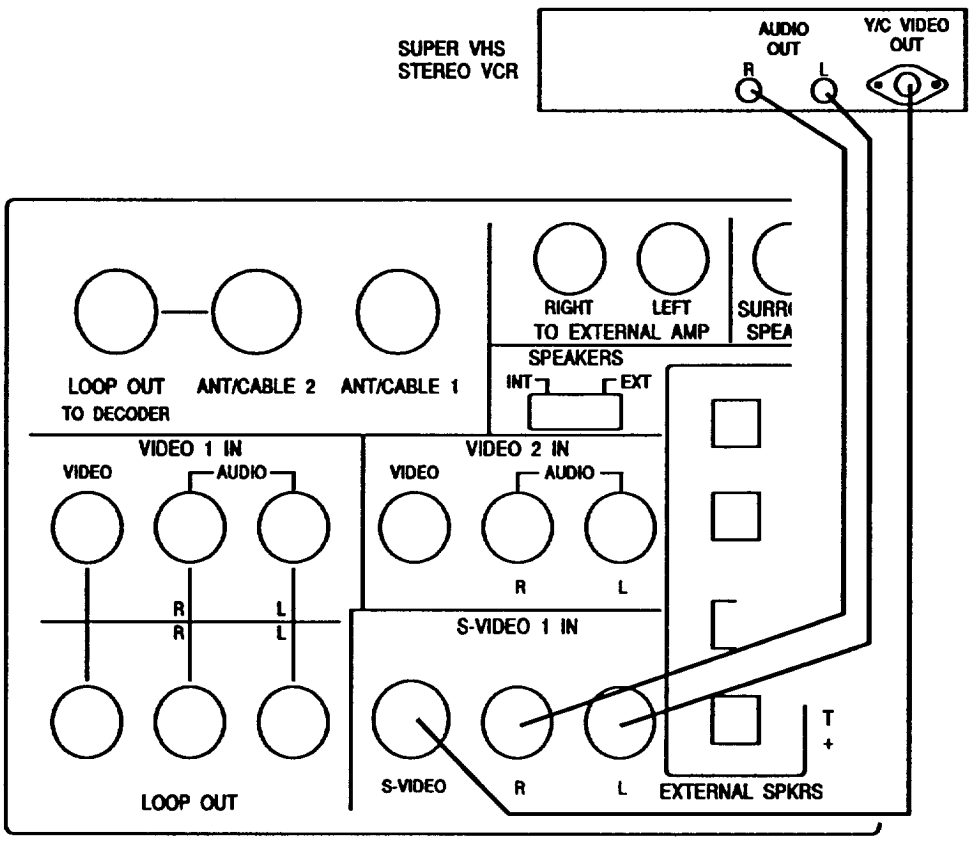

CONNECTIONS FOR YOUR TV

STEP 4. MAKE STEREO AUDIO CONNECTION TO AUDIO AMPLIFIER

Using an External Amplifier with Speakers While the TV's Speakers are OFF

1. Make the connections to the external amplifier as shown in the diagram below.
2. Place the SPEAKER EXT/INT switch on the TV in the INT position (TV's speakers are ON).
3. Turn the TV ON. Increase the volume level of the TV until the sound just starts to distort (sound bad).
4. Place the SPEAKER EXT/INT switch on the TV in the EXT position (TV's speakers are OFF).
5. Turn the external audio amplifier ON. Adjust the volume level of the audio amplifier for the highest level you will need for your listening pleasure.
6. Adjust the volume level of the TV for the normal listening level as heard through the speakers of your audio amplifier.
7. You can now use the VOLUME control on the TV or on the remote control to adjust the volume of the speakers of your audio amplifier.

Using an External Amplifier with Speakers While the TV's Speakers are ON

1. Make the connections to the external amplifier as shown in the diagram below.
2. Place the SPEAKER EXT/INT switch on the TV in the INT position (TV's speakers are ON).
3. Turn the TV ON. Increase the volume level of the TV until the sound just starts to distort (sound bad).
4. Turn the external audio amplifier ON. Adjust the volume level of the audio amplifier for the highest level you will need for your listening pleasure.
5. Adjust the volume level of the TV for the normal listening level as heard through the speakers of the TV.
6. You can now use the VOLUME control on the TV or on the remote control to adjust the volume of both the TV's speakers and the audio amplifier's speakers.

NOTE: If the volume of the internal TV speakers is set too low, you may hear undesirable noises through the speakers connected to your audio amplifier.

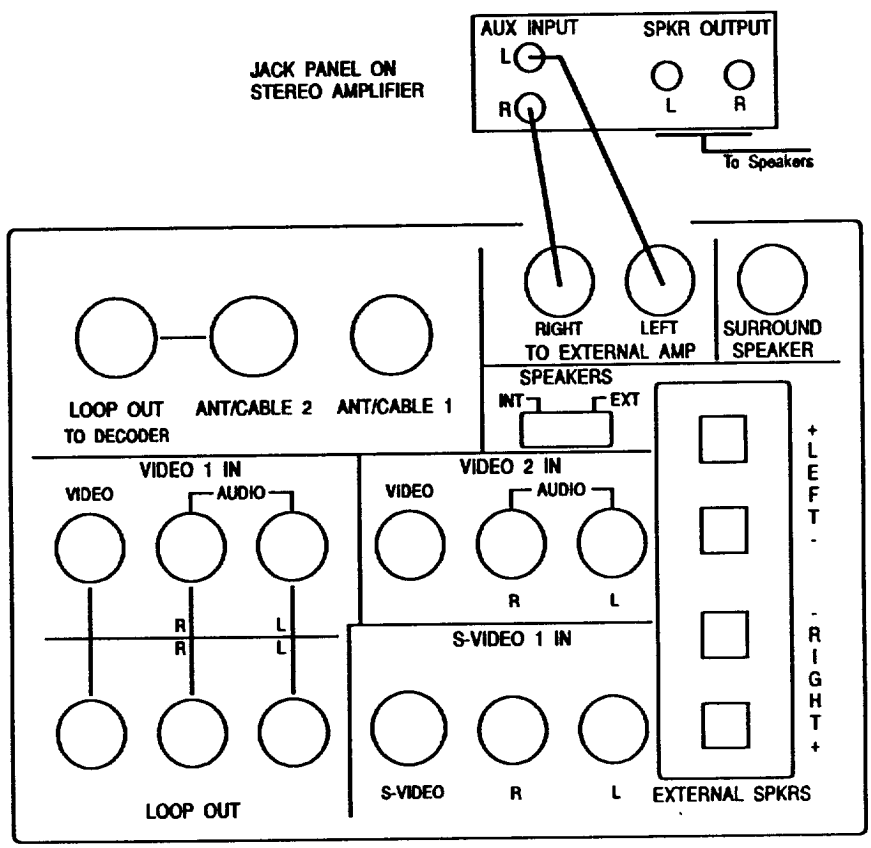

CONNECTIONS FOR YOUR TV

STEP 5. TV CONNECTION TO EXTERNAL SPEAKERS

1. Place the SPEAKERS switch on the back of the TV in the INT position.
2. Connect the two external speaker terminals. Observe polarity of the connections; silver speaker wire to the red terminal and copper speaker wire to the black terminal. Use 8-ohm speakers only.
3. Place the SPEAKERS switch on the back of the TV in the EXT position.
4. Use the VOLUME control on the TV or on the remote control to adjust the volume of the external speakers.

STEP 6. TV CONNECTION TO SURROUND SOUND SPEAKERS

1. Mount and connect the optional Surround Sound speakers by following the instructions provided with the speakers.
2. In the AUDIO Menu, set the TV to STEREO.
3. Use the SURROUND option in the AUDIO Menu to adjust the volume of the surround speakers.
4. Use the VOLUME control to adjust the volume of the TV.
5. The level of the Surround sound varies relative to the difference between the left- and right-channel stereo signals. The degree of the Surround sound effect depends on the program source you are using. Some sources, especially video tape, provide greater sensation of Surround sound than may be obtained from a standard TV broadcast.

NOTE: The surround jack is always active. Therefore, the position of the speaker switch does not affect the operation of surround speakers.

CAUTION: The Surround Sound output has an 8-ohm system impedance. It is for use with two 16-ohm speakers connected in parallel. Use of non-surround speakers may damage your TV.

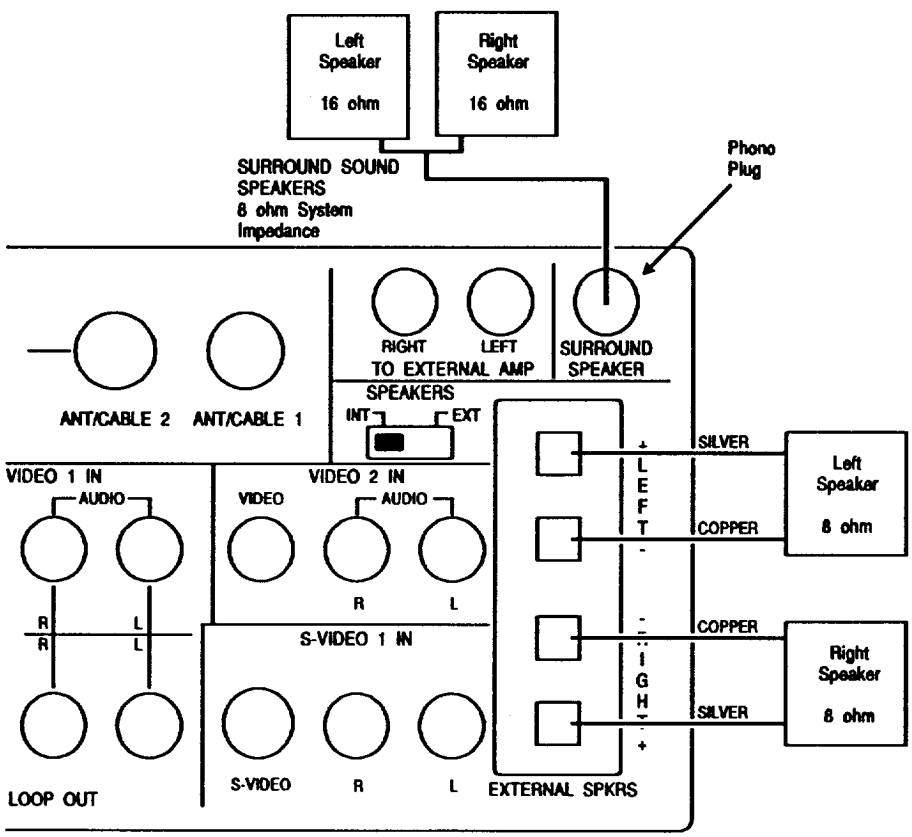

CONNECTIONS FOR YOUR TV

STEP 7. A/V CONNECTION TO FRONT A/V JACKS (Some Models)

Some models of TVs are equipped with an additional set of audio and video jacks on the front of the TV. These are provided primarily as a convenience for connecting a video Camcorder. However, they are just as useful in connecting VCRs or Video disc players. In addition, a Super-Video (Y-C) jack is also provided.

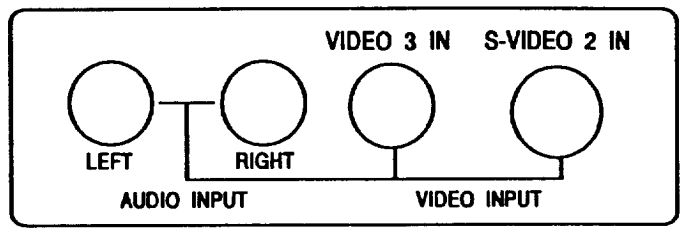

To connect a S-Video VCR to these jacks:

1. Connect the Y/C-VIDEO Output cable from the Super-VHS VCR to the S-VIDEO 2 Y-C jack.
2. Connect the Right and Left AUDIO Output from the Super-VHS VCR to the Right and Left AUDIO INPUT jacks. (These audio connections must be made in order to receive sound from the S-VHS VCR.)

NOTE: Make sure S-VIDEO 2 is selected in the SOURCE Menu to view this source. To select this source, refer to the SOURCE MENU section of this booklet.

To connect a camcorder to these jacks:

1. Connect the camcorder Right/Left AUDIO OUTPUT into the VIDEO 3 IN Right and Left audio jacks on the TV.
2. Connect camcorder VIDEO OUTPUT into the VIDEO 3 IN VIDEO jack on TV.

Operation: To use these VCR connections, VIDEO 3 must be selected from the SOURCE MENU.

THE FIRST TIME YOU OPERATE YOUR TV

STEP 1. CONNECT THE POWER

Plug your TV into an unswitched AC power source.

The switched AC outlets found on some video equipment will not continue supplying power to the TV once the equipment is turned off. If the power to the TV is interrupted, you will have to set the clock in the TV to the current time.

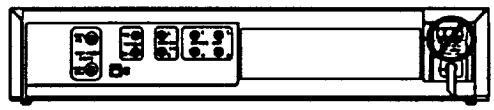

Do not plug TV into switched outlet on cable-TV decoder.

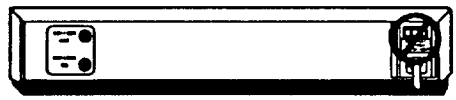

Do not plug TV into switched outlet on a VCR.

STEP 2. TURN TV ON

Turn the TV ON by pressing OFF-ON.

STEP 3. SELECT YOUR VIEWING SOURCE

A TV source refers to the equipment connected to the connection center on the back of your TV. For example, antenna, cable-TV, VCR, video disc player, etc. You can select what source supplies the picture and sound to your TV by pressing SOURCE on your remote control and viewing the SOURCE MENU.

To Access SOURCE MENU

1. Press SOURCE on the remote control to view the SOURCE MENU.
2. Press SOURCE repeatedly until the correct antenna or cable-TV source is highlighted, then press ENTER.
3. Press ENTER again to return to normal viewing.

SOURCE MENU

→ ANT/CABLE 1
ANT/CABLE 2
VIDEO 1
VIDEO 2
S-VIDEO 1

NOTES: The correct antenna or cable-TV source must be selected before STEP 4 in order for the AUTO CH. SEARCH to correctly find available channels

For information about sources, see "Source Menu" section of this operating guide.

STEP 4. USE AUTO CH. (Channel) SEARCH

When your TV is first powered up, you will see the SETUP MENU with AUTO CH. SEARCH highlighted. AUTO CH. SEARCH finds all available channels from the selected source and stores them in memory for access by CHANNEL Up/Down. To activate AUTO CH. SEARCH, press ADJUST (ADJ) Left/Right. When the search is complete, you can watch the TV program of your choice.

NOTES:

1. The SETUP MENU with AUTO CH. SEARCH highlighted will appear each time you turn on your TV until AUTO CH. SEARCH has been used at least once.
2. The AUTO CH. SEARCH message appears only if one of the ANT/CABLE sources is selected.
3. Your antenna or cable must be connected to the TV **before** you use AUTO CH. SEARCH.

SETUP MENU

→ AUTO CH. SEARCH START
CH. ADD/DEL
CH. LABELS
TUNING BAND
AUTO FINE TUNE
CLOCK SET
CAPTIONS
CH. BACKGROUND

Setup Menu with Auto Ch. Search Highlighted

STEP 4. USE AUTO CH. (Channel) SEARCH (CONTINUED)

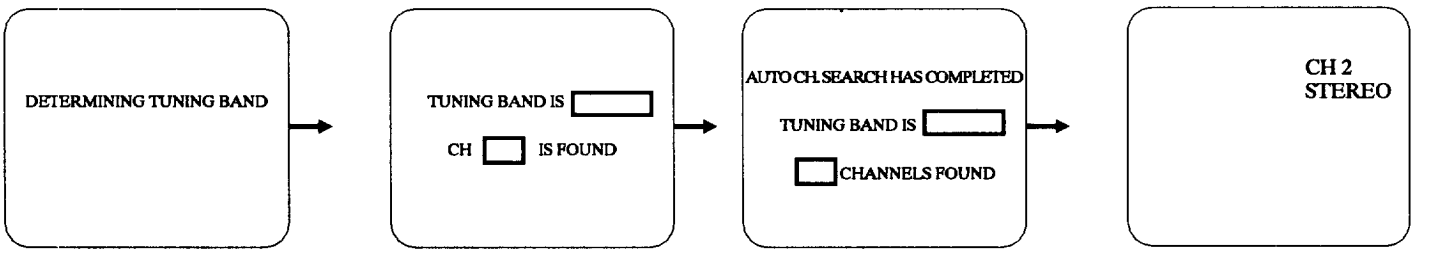

Determining Tuning Band | **While Searching for Active Channels** | **When Search is Complete** | **When Returning to Channel/Audio Display**

STEP 5. USE OTHER OPTIONS

You may want to consider using the following options:

- Program the channels accessed when using CHANNEL Up/Down. Refer to CH. ADD/DEL option of the "Setup Menu" section of this operating guide for details.
- Add labels (such as NBC and ABC) to the channel display. Refer to CH. LABELS option of the "Setup Menu" section of this operating guide for details.
- set the clock in the TV. Refer to the CLOCK SET option of the "Setup Menu" section of this operating guide for details.

OPERATING YOUR TV

BASIC TV OPERATIONS

Selecting Channels Using CHANNEL Up/Down: You may select a channel through channel scanning by using CHANNEL Up/Down keys. Only channels stored in the channel scan sequence can be selected.

Selecting Channels by Using Numbers on Remote: Press the numbers corresponding to the channel desired, then press ENTER. Any channel in the band chosen can be selected through direct number entry.

FLASHBK (Flashback) on Remote: Press FLASHBK to return to the last TV channel you were watching.

Adjusting Volume: You can adjust the volume of your TV by using VOLUME Up/Down.

Muting Volume: To mute the sound coming from your TV, press MUTE on the remote control. To restore sound, press MUTE again.

After an Extended Power Outage: If you previously used AUTO CH. SEARCH, you do not have to use it again unless you permanently changed the connections to the TV. All of the channels previously found are stored in protected memory, and are not affected by a power outage. However, the clock must be reset to the current time.

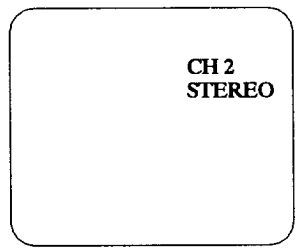

Channel/Audio Display (Before Clock is Set)

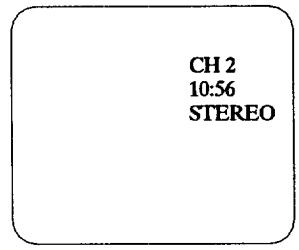

Channel/Time/ Audio Display (After Clock is Set)

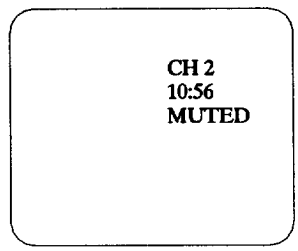

Channel/Time Display While TV is Muted

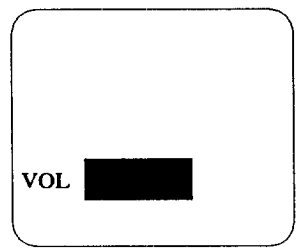

Volume Display *

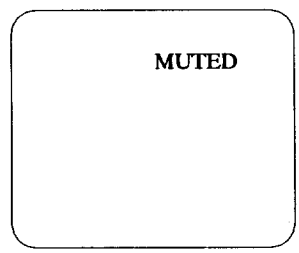

Mute Display *

* VOL or MUTED display is shown only when captions are not being displayed.

SLEEP TIMER

The remote control is equipped with a TIMER button that provides access to the SLEEP TIMER available with some TV models. By using the SLEEP TIMER, you can program the TV to automatically shut off after a 15 minute period up to 4 hours.

To Set SLEEP TIMER

1. Press TIMER to see status display
2. Press TIMER repeatedly until you reach desired shut-off time.

One minute before the TV shuts off, the GOOD NIGHT display appears on the screen. At this time you have a choice of the following three actions.

1. Do nothing. The TV will turn off in one minute. The display "counts down" the remaining seconds.
2. Remove the GOOD NIGHT display by pressing ENTER. The TV will still shut off in one minute.
3. Delay the shut off by pressing TIMER to select a new shut-off time.

To Cancel the SLEEP TIMER

1. Press TIMER repeatedly until the status shows OFF.

NOTE: The SLEEP TIMER resets to OFF when you turn off the TV.

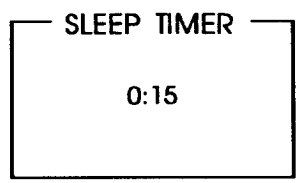

Sleep Timer Display

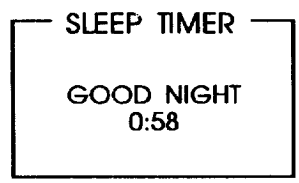

"Good Night" Display

GETTING TO KNOW YOUR TV

FRONT PANEL CONTROLS

Refer to the illustration below while reading the descriptions of the TV controls.

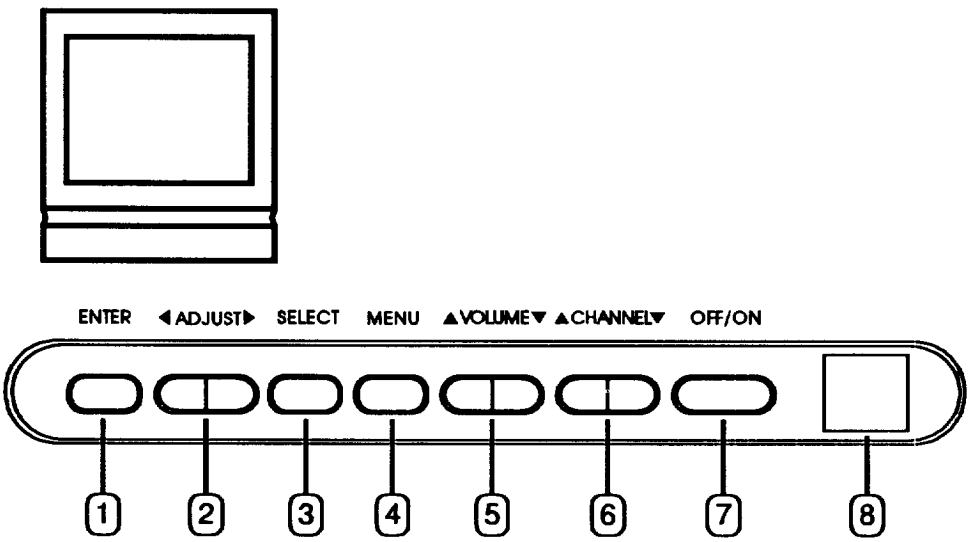

1. **ENTER**
   Press to see the Channel/Time display, or to remove any on-screen display or menu.
2. **ADJUST (ADJ) Left/Right or ◀/▶**
   Press during on-screen menu operation to see information/status display for selected option. Press again to adjust the selected menu option.
3. **SELECT**
   Press during on-screen menu operations to select a menu option.
4. **MENU**
   Press once to see a menu. Press repeatedly to sequence through the available menus.
5. **VOLUME Up/Down**
   Press to increase or decrease the sound level.
6. **CHANNEL Up/Down**
   Press to select channels higher or lower than the channels being viewed. You can also add channels or delete channels from the scanning sequence stored in memory. See CH. ADD/DEL option of the "Setup Menu" section of this operating guide for channel programming information.
7. **OFF-ON**
   Press to turn TV power ON or OFF.
8. **Remote Control Detector Window**
   Point the remote control towards this window to operate the TV.

GETTING TO KNOW YOUR REMOTE CONTROL

OPERATION

The multi-brand remote control supplied with your new Zenith TV allows you to operate most models of infrared (IR) remote-controlled TVs, VCRs and cable-TV decoders, even if they are all different brands. In this way, it takes the place of the several remote controls previously needed.

Your multi-brand remote has already been programmed to operate your new Zenith TV, a Zenith manufactured cable-TV decoder and a Zenith VHS VCR. It must be programmed to operate other brands of equipment.

The following instructions are for the operation of Zenith equipment. The instructions for using this remote with non-Zenith equipment are in the section entitled "Programming Your Remote Control."

CHOOSE THE OPERATING MODE

To use the remote to operate your TV, CABLE-TV decoder or a VCR, you must first choose the mode of operation of the remote. To select TV, CABLE or VCR mode, press the MODE key until the corresponding indicator lights.

Some controls on the remote, like PLAY and VOLUME, will always operate the VCR or the TV. Whether other keys operate the TV or VCR depends on which mode of operation the remote control is in. For example, OFF-ON will turn the VCR on and off while the remote control is in the VCR mode. It will turn the TV on or off while the remote control is in TV mode.

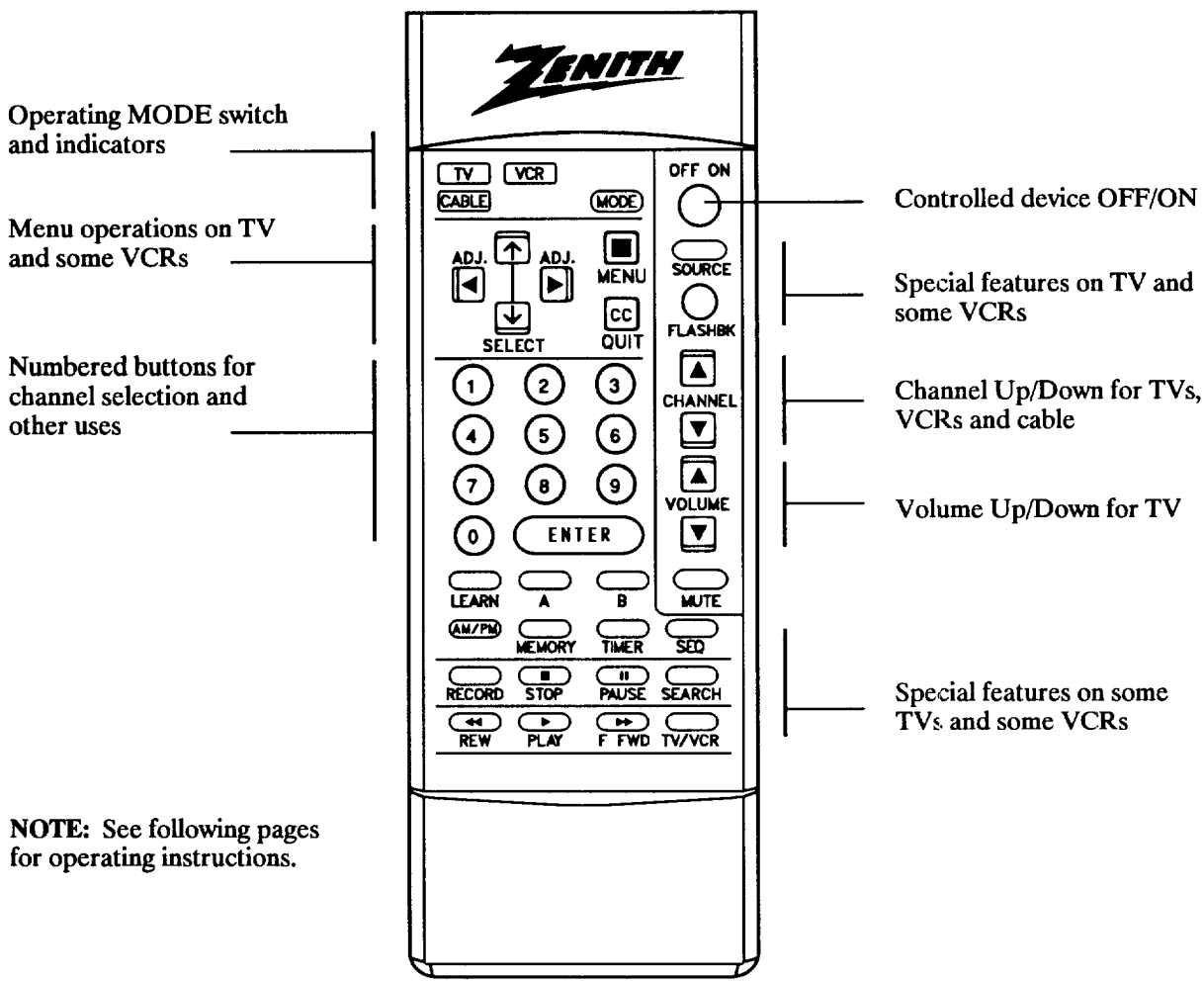

NOTE: See following pages for operating instructions.

MBR3420

GETTING TO KNOW YOUR REMOTE CONTROL

TV OPERATIONS

The following functions and operations apply to your Zenith TV. The remote control must be in the TV mode to operate your TV.

The VOLUME control will always adjust the TV volume regardless of the selected operating mode of the remote.

MODE
Press repeatedly to select the TV mode of operation.

TV
Lights when TV mode of operation is selected.

CAPTIONS
Used to view closed captions broadcast with some television programs.

MENU, SELECT and ADJUST
Used with on-screen menus to see menu, select an option, and adjust that option.

Numbered Buttons
Used to select a TV channel.

ENTER
Used to view the Channel/Time Display or to remove any on-screen menu or display.

TIMER
Used to activate the SLEEP TIMER.

For optimum performance, point the remote control toward your TV.

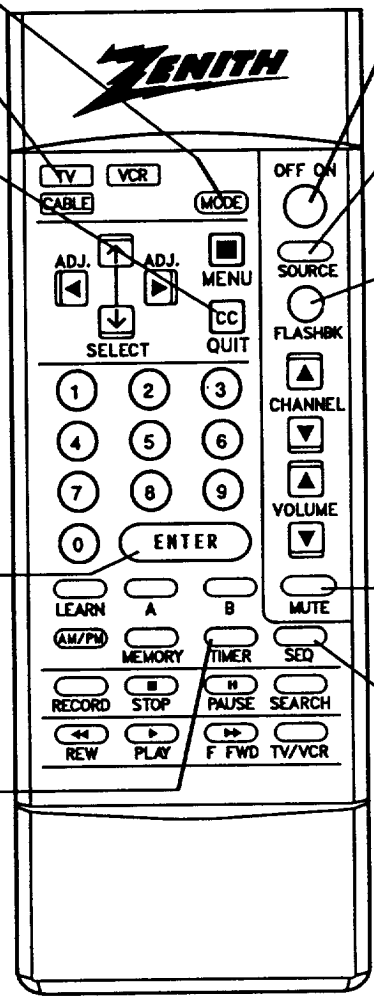

OFF/ON
Used to turn TV ON or OFF.

SOURCE
Press to display the menu of TV sources for TVs having a SOURCE Menu. Press SOURCE again to step through the source selections. On some TVs, press SOURCE to select the AUX (Auxiliary) channel.

FLASHBK (Flashback)
Press to return to the last TV channel you were watching.

CHANNEL Up/Down
Used to sequence through the TV channels. Press CHANNEL Up or Down to change to the next higher or lower channel.

VOLUME Up/Down
Used to adjust the volume level of the TV.

MUTE
Used to turn off sound while the picture remains. Press again to restore the sound.

SPACIAL EQUALIZATION (SEq)
Used to select SEq audio mode on TVs equipped with SEq feature.

Remote Control MBR3420
TV Operations

GETTING TO KNOW YOUR REMOTE CONTROL

VCR OPERATIONS

The following functions and operations apply to Zenith VCR models built after 1988. The remote control supplied with your VCR may have keys not duplicated on the new remote. If these functions are desired, the original remote control will have to be used.

For complete details on how to operate your Zenith VCR, refer to the operating guide supplied with it.

The remote control must be in the VCR mode to operate your VCR.

For optimum performance, point the remote control toward your VCR.

MODE

Press repeatedly to select the VCR mode of operation.

VCR

Lights when VCR mode of operation is selected.

MENU, SELECT, ADJUST and QUIT

Used with the on-screen menus and programming options of the VCR. See VCR operating guide for details

Numbered Buttons

Used to select a TV channel through the VCR. Also, used to set the timer in the VCR, and to enter programming information.

ENTER

Used with the numbered buttons to select a TV channel through the VCR.

AM/PM

Used to set timer during programming.

MEMORY

Used to activate the VCR MEMORY feature. See VCR operating guide for details.

RECORD, STOP, PAUSE, SEARCH, REW, PLAY and F FWD

Used for tape recording and playback functions. See the VCR operating guide for details.

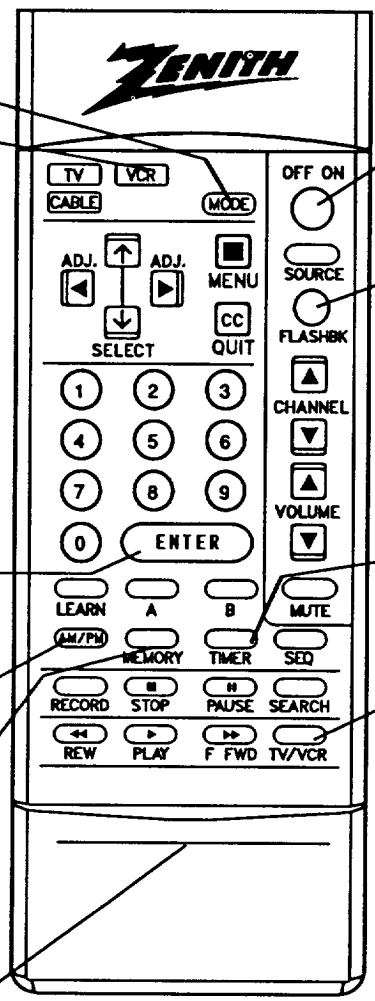

Remote Control MBR3420
VCR Operations

OFF/ON

Used to turn VCR ON or OFF.

FLASHBK (Flashback)

Press during VCR playback to view the channel tuned by the VCR.

CHANNEL Up/Down

Used to select a TV channel by going Up or Down through channels from the VCR.

TIMER

Activates TIME RECORD on some VCRs.

TV/VCR

Used to select the source of the programs seen on the TV. Switches the VCR between TV mode and VCR mode. **TV Mode:** channels are selected through the TV. **VCR Mode:** channels or tape operation are selected through the VCR.

GETTING TO KNOW YOUR REMOTE CONTROL

CABLE-TV OPERATIONS

The following functions and operations apply to a Zenith cable-TV decoder. The remote control supplied with your cable-TV decoder may have keys not duplicated on the new remote. If these functions are desired, the original remote control will have to be used.

For complete information on how to operate your cable-TV decoder, refer to the operating guide provided with it.

The remote control must be in the CABLE mode to operate your cable-TV decoder. The VOLUME control will always adjust the TV volume regardless of the selected operating mode of the remote.

For optimum performance, point the remote control toward your cable-TV decoder.

MODE
Press repeatedly to select the CABLE mode of operation.

CABLE
Lights when CABLE mode of operation is selected.

MENU, SELECT, ADJUST and QUIT
Function depends on cable-TV system.

Numbered Buttons
Used to select channels through cable-TV decoder

ENTER
Press after a channel number is entered to change channel instantly.

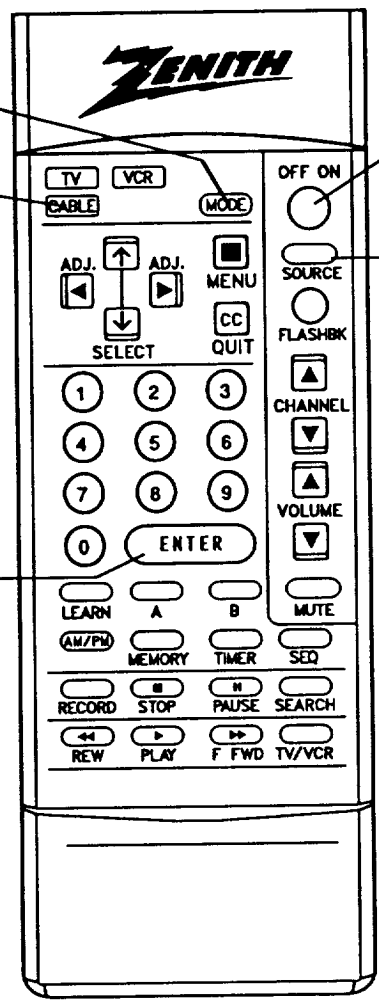

OFF/ON
Used to turn cable-TV decoder ON or OFF.

SOURCE
Selects "A" or "B" cable channels.

CHANNEL Up/Down
Used to sequence through cable-TV channels.

VOLUME Up/Down
Used to adjust the volume level of the TV.

Remote Control MBR3420
Cable-TV Decoder Operations

GETTING TO KNOW YOUR REMOTE CONTROL

PREPARATION FOR USE

Batteries are provided with this remote, but you must install them before using the remote.

INSTALLING BATTERIES

When the effective operating range of your remote becomes noticeably shorter, replace the batteries with two (2) high quality, alkaline, size AAA batteries. Do the following steps:

1. Remove the battery compartment cover by PUSHING DOWN tab and PULLING OUT from top.
2. Insert new batteries as indicated in the diagram inside the compartment. Observe proper battery polarity.
3. Replace the cover by inserting the tab on the bottom of the cover into its housing. Snap the cover into position.
4. After installing new batteries, the remote control will set itself to Zenith brand codes, as follows: TV = 101, VCR = 201 and CABLE = 301.

   If you are going to operate equipment that uses different codes, the remote must be reprogrammed for those codes. Refer to "Programming the Remote Control" section for programming information.

CAUTIONS:

- Do not place heavy objects on top of the remote control buttons. Prolonged accidental operation of the remote control will shorten battery life.
- If you are not going to use the remote control for a month or more, remove the batteries. Battery leakage can cause damage to the remote control.
- Zenith is not responsible for damage caused by such battery leakage.

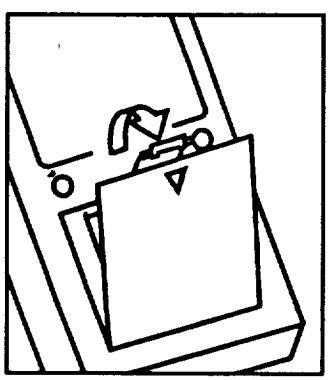

1.

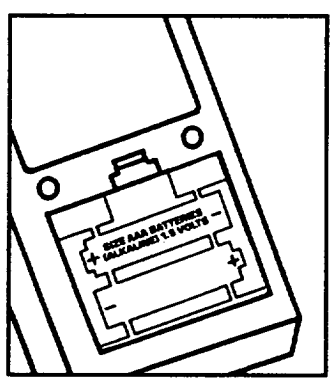

2.

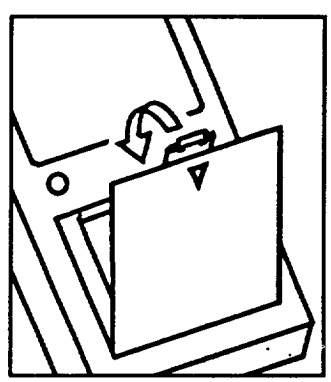

3.

ON-SCREEN MENUS

AVAILABLE MENUS

Your TV is menu operated, that is, adjustments that can be made to the TV appear on the screen in a list of choices you can make by using the controls on the front panel of the TV or on the remote control.

There are four basic menus: SOURCE, SETUP, AUDIO, and VIDEO. These menus list everything you can adjust to your personal preference or needs. In addition, separate SOURCE and VIDEO menus appear for PIP while PIP is active.

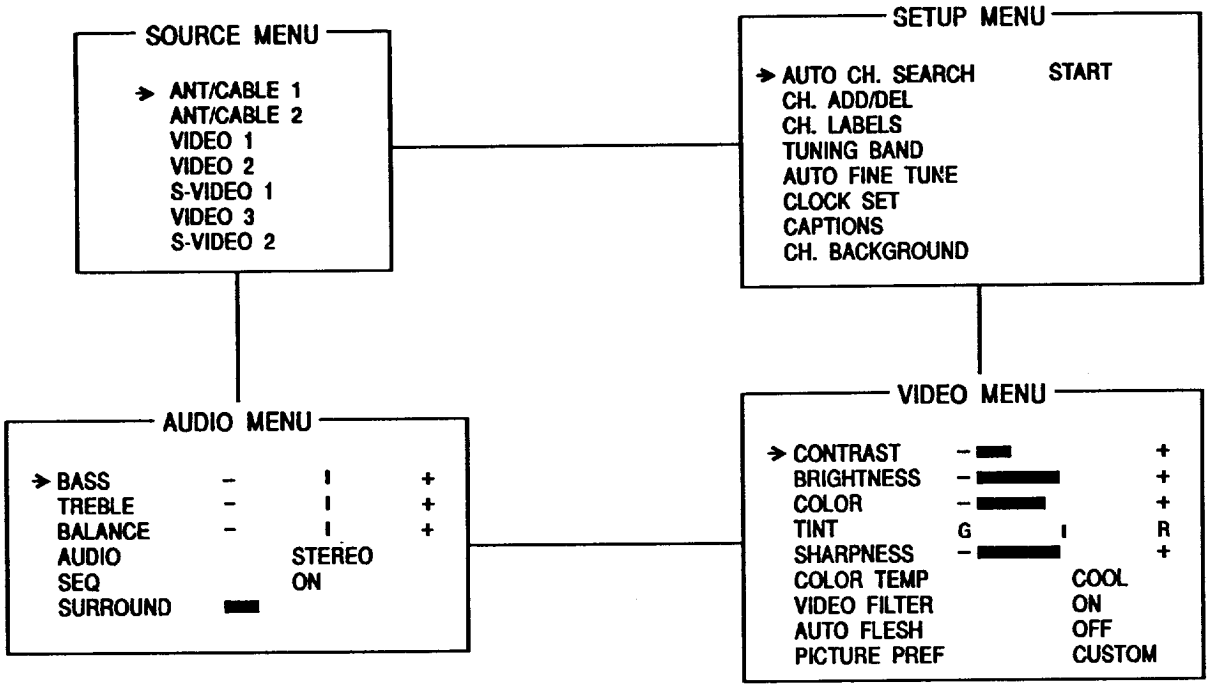

SUMMARY OF MENU ITEMS

SOURCE Menu

Selecting ANT/CABLE 1 or 2: Either of these sources may be used for input from an antenna or a cable-TV line.

Selecting VIDEO 1 or 2: Either of these sources may be used for input from an auxiliary video source such as a VCR or a video disc player.

Selecting S-VIDEO 1: Select this source if a Super-VHS VCR is connected to your TV.

Selecting VIDEO 3 (Some models): If your model of TV is equipped with front A/V jacks, select this source if a camcorder or other video component is connected to the front jacks.

Selecting S-VIDEO 2 (Some models): If your model of TV is equipped with front A/V jacks, select this source if a Super-VHS VCR is connected to the front jacks.

Make sure the selected source corresponds to the jack to which the input cable or antenna wire is connected on the back of the TV.

SETUP Menu

AUTO CH. SEARCH: Finds all available channels and stores them in memory for access by using CHANNEL Up/Down.

CH. ADD/DEL: Changes the list of active channels selected by using CHANNEL Up/Down.

CH. LABELS: Adds a channel name "LABEL" to the channel display. For example, ABC may appear when this network channel is tuned.

TUNING BAND: Determines the operation of the channel tuner inside the TV.

AUTO FINE TUNE: Lets your TV compensate for variations in broadcast and cable-TV frequencies.

CLOCK SET: Sets the clock in the TV to the correct time.

CAPTIONS: Displays closed captions (CC) or informational text when available.

CH. BACKGROUND: Changes the background of the channel/time display.

(continued on next page)

ON-SCREEN MENUS

SUMMARY OF MENU ITEMS (CONTINUED)

AUDIO Menu

BASS: Adjusts the BASS (low frequency) level.

TREBLE: Adjusts the TREBLE (high frequency) level.

BALANCE: Adjusts the BALANCE of sound between the left and right speakers for stereophonic programs.

AUDIO MODE: Allows for receiving a Second Audio Program (SAP), such as a program broadcast with two audio portions (typically two languages), or lets you select stereophonic (STEREO) or monaural (MONO) speaker operation.

SEQ: Turns on an enhanced stereo mode.

SURROUND: Adjusts Surround Sound volume when used with a separately supplied Surround Sound audio system.

VIDEO Menu

CONTRAST: Adjusts the overall contrast and color level of the picture.

BRIGHTNESS: Adjusts the brightness level of black areas in the picture.

COLOR: Adjusts the intensity of the colors in the picture.

TINT: Adjusts the color of the flesh tones.

SHARPNESS: Adjusts the clarity for the clearest picture.

COLOR TEMP: Allows you to change the "color temperature" or picture white balance between cooler natural whites and warmer (red) colors.

VIDEO FILTER: Reduces video "noise" or interference in dark picture areas resulting in clearer overall pictures.

AUTO FLESH: Automatically maintains natural skin tones under changing scene and video source conditions.

PICTURE PREF: Lets you decide if you want to use your own CUSTOM video settings, the factory PRESET video settings or the THEATER option for optimum video settings when viewing in low-light conditions.

BASIC MENU OPERATION

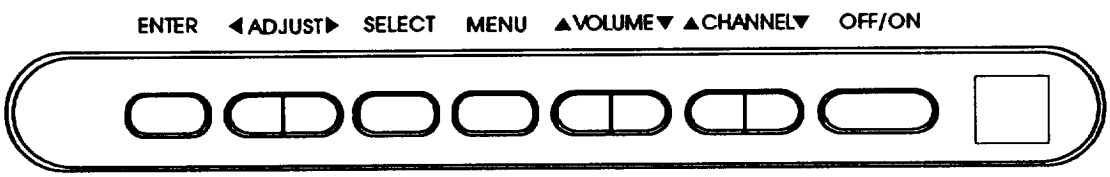

1. **To See a Menu or Change a Menu:**
   Press MENU repeatedly until the desired menu is shown. Example shows choosing the SETUP Menu.

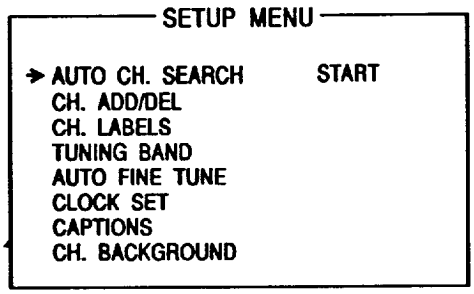

Choosing Setup Menu

2. **To Select an Option/Feature on a Menu:**
   Press SELECT Up/Down repeatedly until the desired option/feature is highlighted. The example in the next column shows selecting TUNING BAND.
3. **To Adjust an Option/Feature:**
   Press ADJUST (ADJ) Left/Right to see and choose the available options.

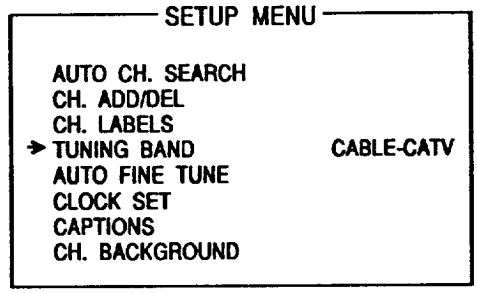

Selecting Tuning Band

4. **To Access a Different Main Menu:**
   Press MENU repeatedly until the desired menu is shown.
5. **To Return to Normal Viewing:**
   Press ENTER (ENT) or wait a few seconds and the TV will return automatically to normal operation.

Service Menus: In addition to the menus shown in this operating guide, there are menus for factory and field servicing. Service menus are not intended for use by the owner.

If you inadvertently access a service menu, press ENTER (ENT) to return immediately to normal TV viewing.

SOURCE MENU

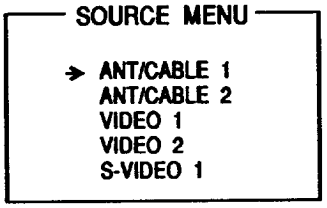

Source Menu

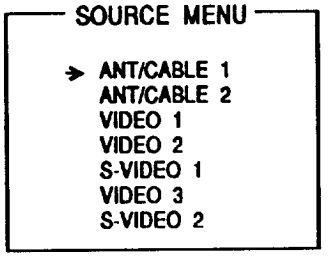

Source Menu for TVs with Front Jacks

TO SELECT A SOURCE

PURPOSE

The SOURCE MENU is used to specify the equipment that is being used to supply the video and audio signals. You select the source you want by selecting the SOURCE MENU. It shows the possible sources available for your viewing selection.

To Access the SOURCE MENU Directly

1. Press SOURCE on the remote control to bring up the SOURCE MENU.
2. Press SOURCE repeatedly until the source you want is highlighted.
3. Press ENTER to return to normal viewing.

To Access the SOURCE MENU Indirectly

1. Press MENU until the SOURCE Menu is displayed.
2. Press SELECT Up/Down until the desired source is highlighted.
3. Press ENTER to return to normal viewing.

SOURCE IDENTIFICATION

The Channel/Time display is used to determine the type of input source currently being viewed. To see the Channel/Time display, press ENTER. If an antenna or cable-TV source is being viewed, the Channel/Time display is shown in the Channel Number/Time format. If a Video source is being viewed, the Channel/Time display is shown in the Video/Time format.

NOTE: The sources are identified by color in both the on-screen displays and on the connection center on the back of the TV. The color for the Channel/Time display, Volume and Muted display will match the color or the source you are watching. The color will also help to identify which source you are watching when viewing PIP. The colors are as follows:

SOURCE	COLOR
ANT/CABLE 1	RED
ANT/CABLE 2	BLUE
VIDEO 1	MAGENTA
VIDEO 2	LT. BLUE
S-VIDEO 1	GREEN
VIDEO 3	YELLOW
S-VIDEO 2	WHITE

SOURCE EQUIPMENT CONNECTIONS

The actual source selected for viewing on your TV depends on how the TV is connected to external equipment.

Selecting ANT/CABLE 1 or 2 from SOURCE Menu: Routes the ANTENNA or cable-TV source to the TV for viewing. You see program material from whichever signal source is connected to the ANT/CABLE jack. Usually the antenna is connected to the ANTENNA jack. In cable applications, the output from a cable-TV decoder is connected to this jack. For VCR application, the ANT OUT from the VCR is connected to this jack.

Selecting VIDEO 1 or 2 from SOURCE Menu: Routes the auxiliary video source (such as a VCR or a Video Disc player) to the TV for viewing. The video source must be connected to the corresponding VIDEO 1/2 jacks.

Selecting S-VIDEO 1: Routes the auxiliary Super-VHS VCR Source to the TV for viewing. The Super-VHS VCR must be connected to the corresponding input jacks.

Selecting VIDEO 3 from SOURCE Menu: Routes the front video source (such as a camcorder, VCR or a Video Disc player) to the TV for viewing. The video source must be connected to the corresponding VIDEO 3 jacks.

Selecting S-VIDEO 2: Routes the front Super-VHS VCR source to the TV for viewing. The Super-VHS VCR must be connected to the corresponding S-VIDEO 2 input jacks.

SETUP MENU

SETUP MENU

→ AUTO CH. SEARCH START
CH. ADD/DEL
CH. LABELS
TUNING BAND
AUTO FINE TUNE
CLOCK SET
CAPTIONS
CH. BACKGROUND

SETUP MENU

SETUP MENU

→ CLOCK SET --:--
CAPTIONS
CH. BACKGROUND

SETUP MENU for VIDEO and S-VIDEO SOURCES

AUTO CH. (Channel) SEARCH

Purpose

Finds all available channels and stores them in memory for access by CHANNEL Up/Down.

Use AUTO CH. SEARCH only when you first install your TV, or when you permanently change the connections to the TV. For example, when you replace the antenna with a cable-TV system.

Before Using AUTO SEARCH

Connect and turn ON all external equipment, such as a cable-TV decoder, VCR, etc.

NOTE: AUTO CH. SEARCH can only be used with ANT/CABLE 1 or 2 source selection.

To Use AUTO SEARCH

1. AUTO CH. SEARCH should be selected if you followed the "Basic Menu Operation" given in the "On-Screen Menu" section.
2. Press ADJUST (ADJ) Left/Right to start the AUTO CH. SEARCH. The status of the search is shown in the display. When the search is complete, you can watch the TV program of your choice.
3. Use the AUTO CH. SEARCH feature independently for each ANTENNA or CABLE signal source connected to your TV. Select one source by using the SOURCE MENU (ANT/CABLE 1 or 2) and use AUTO CH. SEARCH. When completed, select the other source and use AUTO CH. SEARCH again.

When Some Channels Are Not Found

AUTO CH. SEARCH finds only active channels and stores them in its channel memory. You can add channels to those stored in memory by using the CH. ADD/DEL option.

If you have difficulty tuning some channels, you may have to manually change the BAND SELECT and AUTO FINE TUNE mode. Refer to respective option for details.

NOTE: If the output from a cable box is the input to your TV, the only active channel will be either 3 or 4.

SETUP MENU

→ AUTO CH. SEARCH START
CH. ADD/DEL
CH. LABELS
TUNING BAND
AUTO FINE TUNE
CLOCK SET
CAPTIONS
CH. BACKGROUND

Selecting Auto Ch. Search

DETERMINING TUNING BAND

Determining Tuning Band

TUNING BAND IS [ ]
CH [ ] IS FOUND

While Searching for Active Channels

AUTO CH. SEARCH HAS COMPLETED
TUNING BAND IS [ ]
[ ] CHANNELS FOUND

When Search is Complete

CH 2
STEREO

When Returning to Channel/Audio Display

SETUP MENU

CH. (Channel) ADD/DEL

Purpose

Lets you add channels to and remove channels from the active channels found by the AUTO CH. SEARCH option. In this way, you can customize the channels that are accessed through CHANNEL Up/Down.

CH. ADD/DEL is an optional feature. You do not have to activate this feature in order to use your TV.

Before Using CH. ADD/DEL

Use the AUTO CH. SEARCH feature, if not previously used when you first installed the TV.

NOTE: CH. ADD/DEL can only be used with ANT/CABLE 1 or 2 Source selection.

```
SETUP MENU

  AUTO CH. SEARCH
→ CH. ADD/DEL              CH 13 ADD
  CH. LABELS
  TUNING BAND
  AUTO FINE TUNE
  CLOCK SET
  CAPTIONS
  CH. BACKGROUND
```

Selecting Ch. Add/Del

To Add a Channel to Scan Sequence

1. CH. ADD/DEL should be selected if you followed the "Basic Menu Operation" given in the "On-Screen Menu" section.
2. Use the numbered buttons to access channels not presently stored in the channel scan sequence.
3. Add channel by pressing ADJUST (ADJ) Left/Right until the display shows ADD.
4. Press ENTER to return to normal TV viewing.

To Delete a Channel from Scan Sequence

1. CH. ADD/DEL should be selected if you followed the "Basic Menu Operation" given in the "On-Screen Menu" section.
2. Using CHANNEL(CH) Up/Down go to the channel you wish to remove.
3. Remove channel by pressing ADJUST (ADJ) Left/Right until the display shows DEL.
4. Press ENTER to return to normal TV viewing.

When Some Channels Can Not Be Tuned

If you have difficulty tuning some channels, you may have to manually set the TUNING BAND option. If you have the correct band, but are still having difficulty finding a channel you know to be active, set the AUTO FINE TUNE to SEARCH.

CH. (Channel) LABELS

Purpose

This option allows you to show a channel "name" each time the channel display appears on the TV. In other words, if you choose the label "ABC" for channel 13, "ABC" appears in the Channel/Time display. Therefore, you always know what channel you are watching.

The labels shown in the following table may be "assigned" to channels.

NOTES:

- CH. LABELS is not displayed when an auxiliary video source (Video 1, 2, 3 or S-Video 1 or 2) is being used.
- These labels are in the memory of the TV. You can not make your own labels.
- To remove an assigned channel label, select the one that is "blank."

```
SETUP MENU

  AUTO CH. SEARCH
  CH. ADD/DEL
→ CH. LABELS               CH 13 ABC
  TUNING BAND
  AUTO FINE TUNE
  CLOCK SET
  CAPTIONS
  CH. BACKGROUND
```

Selecting Ch. Labels

A&E	ABC	ACTS	ADC	AMC	BET
BRAV	CA	CBC	CBN	CBS	CMTV
CNBC	CNN	COM	CSPN	CTN	CTV
DIS	DISC	E!	ENC	ESPN	ET
EWTN	FAM	FNN	FOX	GALA	HBO
HN	HSE	HSN	IC	INSP	LIFE
MAX	MEU	MMT	MTV	NBC	NICK
NOS	PBS	PLAY	PTL	QVC	REQ
SC	SHOW	SIN	TBS	TBN	TLC
TMC	TNN	TNT	TRAV	TSN	TWN
USA	VC	VCR	VH1	VISN	VJN
WGN	WTBS	WWOR	YTV	----	

To Use CH. LABELS

1. CH. LABELS should be selected if you followed the "Basic Menu Operation" given in the "On-Screen Menu" section.
2. Using the number buttons or CHANNEL Up/Down, select a channel.
3. Press ADJUST (ADJ) Left/Right to sequence through the available choices until the desired label appears.
4. Press ENTER to return to normal TV viewing.

SETUP MENU

TUNING BAND

Purpose

Allows for setting the TV tuner to match your antenna or cable-TV system.

If you used the AUTO CH. SEARCH feature, the proper BAND was set automatically for your TV. If you did not use AUTO CH. SEARCH, or you are having difficulty tuning channels, the TUNING BAND may have to be set manually to match your viewing needs.

Before Using TUNING BAND

Connect and turn ON all external equipment, such as a cable-TV decoder, VCR, etc. Use CH. AUTO SEARCH, if not previously used.

NOTE: TUNING BAND can only be used with ANT/ CABLE 1 or 2 Source selection.

To Use TUNING BAND

1. TUNING BAND should be selected if you followed the "Basic Menu Operation" given in the "On-Screen Menu" section.

```
SETUP MENU

AUTO CH. SEARCH
CH. ADD/DEL
CH. LABELS
→ TUNING BAND          CABLE-CATV
AUTO FINE TUNE
CLOCK SET
CAPTIONS
CH. BACKGROUND
```

Selecting Tuning Band

2. Press ADJUST (ADJ) Left/Right to select the desired tuning band, as shown below:
   - BROADCAST is used for standard over-the-air broadcasts.
   - Cable – CATV is used for most standard cable-TV (CATV) systems.
   - Cable – HRC is used for cable-TV systems that use HRC (Harmonically Related Carrier).
   - Cable – ICC is used for cable-TV systems using ICC (Incremental Coherent Carrier).

Available Channels per Band

The channels that are available in the broadcast and cable tuning bands are shown below:

BROADCAST Band
VHF 2 to 13 UHF 14 to 69*

* Channels above 69 are not selectable.

CATV, HRC and ICC Bands
1 to 125**

** Channels above 125 are not selectable.

When Some Channels Are Not Clear

If some channels are not clear, change the AUTO FINE TUNE. You may have to try different TUNING BAND and AUTO FINE TUNE combinations until you get a clear picture, channel-to-channel. Refer to the AUTO FINE TUNE option for details.

AUTO FINE TUNE

Purpose

Lets your TV compensate for variations in broadcast and cable-TV frequencies.

If you are having difficulty tuning channels, the AUTO FINE TUNE may have to be set manually to match your viewing needs.

Before Using AUTO FINE TUNE

Connect and turn ON all external equipment, such as cable-TV decoder, VCR, etc.

```
SETUP MENU

AUTO CH. SEARCH
CH. ADD/DEL
CH. LABELS
TUNING BAND
→ AUTO FINE TUNE       FIXED
CLOCK SET
CAPTIONS
CH. BACKGROUND
```

Selecting Auto Fine Tune

NOTE: AUTO FINE TUNE can only be used with ANT/ CABLE 1 or 2 Source selection.

To Use AUTO FINE TUNE

1. AUTO FINE TUNE should be selected if you followed the "Basic Menu Operation" given in the "On-Screen Menu" section.
2. Press ADJUST (ADJ) Left/Right to select the desired mode of operation, as follows.
   - FIXED is used to receive "over-the-air" TV stations, and with many cable-TV systems.
   - SEARCH is used only when the TV must search to find the frequency being received, such as when used with certain VCRs and video game controllers.

When Some Channels Are Not Clear

If some channels are not clear, change the TUNING BAND. You may have to try different AUTO FINE TUNE and TUNING BAND settings until you get a consistently clear picture, channel-to-channel. Refer to the TUNING BAND option for details.

SETUP MENU

CLOCK SET

Purpose

Sets the clock in the TV to the correct time. After the time is set, the current time will appear on the Channel/Time display whenever the TV is turned on, the channel is changed, or ENTER is pressed.

Power Failure Note: The time will have to be reset if power to the TV is interrupted.

```
SETUP MENU

AUTO CH. SEARCH
CH. ADD/DEL
CH. LABELS
TUNING BAND
AUTO FINE TUNE
→ CLOCK SET                10:30
CAPTIONS
CH. BACKGROUND
```

Selecting Clock Set

To Use CLOCK SET from Remote Control

1. CLOCK SET should be selected if you followed the "Basic Menu Operation" given in the "On-Screen Menu" section.
2. Use the numbered buttons on the remote control to enter the current time. Press ENTER to start the clock.

   For example, to set the clock to 10:30, press 1, then 0, then 3, then 0; and then press ENTER. If you enter an invalid time, such as 14:35 or 2:80, the time will disappear and you can enter another time.

To Use CLOCK SET from Control Panel

1. Use SELECT Up/Down to highlight CLOCK SET in the SETUP MENU.
2. Use ADJ Left/Right to set the time, and then press ENTER to start the clock.

CAPTIONS

Purpose

Displays closed captions (CC) or informational text when available on the selected channel.

To Access CAPTIONS Indirectly

1. CAPTIONS should be selected if you followed the "Basic Menu Operation" given in the "On-Screen Menu" section.
2. One of five different selections is shown: OFF, CAPTION 1, CAPTION 2, TEXT 1, and TEXT 2.
3. Press ADJUST (ADJ) Left/Right to select desired mode of operation.
4. The display disappears from the screen automatically in about 10 seconds, or you may press ENTER (ENT) to remove the display immediately.

```
SETUP MENU

AUTO CH. SEARCH
CH. ADD/DEL
CH. LABELS
TUNING BAND
AUTO FINE TUNE
CLOCK SET
→ CAPTIONS                 CAPTION 1
CH. BACKGROUND
```

Selecting Captions

To Access CAPTIONS Directly

1. Press CC-QUIT on the remote control to select CAPTIONS. One of the five different selections is shown: OFF, CAPTION 1, CAPTION 2, TEXT 1, and TEXT 2.
2. Press ADJUST (ADJ) Left/Right to select the desired status.
3. The display disappears from the screen automatically in about 10 seconds, or you may press ENTER (ENT) to remove the display immediately.

(continued on next page)

CAPTIONS (CONTINUED)

Application

Your new TV is able to decode and display the closed captions and informational text that are broadcast with some TV shows. Captions can be subtitles for the hearing impaired, or translations into another language. Informational text can be the daily program schedule for the TV station, or special announcements.

Look for a (CC) or similar sign in your TV schedule, or on the video tape cassette, which indicates that captions are provided.

The closed caption signal is recorded by all VCRs when recording a TV broadcast or copying a tape having closed captions.

About Closed Caption Operation

Once you turn CAPTIONS ON, they will stay ON until you turn CAPTIONS OFF. Captions will appear as they are received. If captions stop being received, they will stop appearing on the TV. If they are received again, captions will automatically appear again on the TV. The captions will appear on the TV as they were created. If they were created in color, they will appear in color. If they were created in both upper and lower case letters, they will appear in both upper and lower case letters.

The TV can not show more than one on-screen display at a time, so no captions will appear until all other displays (Channel/Time) have been removed from the screen. (The exceptions to this rule are the Volume and Mute displays).

To remove a display that is interfering with captions, press ENTER until the display disappears. Likewise, you can instantly remove any captions by pressing ENTER to call up the Channel/Time display. When you press ENTER again, the Channel/Time display disappears and you return instantly to captions.

CAPTIONS has four different selections that can be made: CAPTION 1, CAPTION 2, TEXT 1 or TEXT 2. At the time of this writing, very little appears in any selection except CAPTION 1. Therefore, you should select CAPTION 1 and leave it in that position unless you know there is something you want to see in one of the other selections. Once you make a selection, that selection is remembered until you change it.

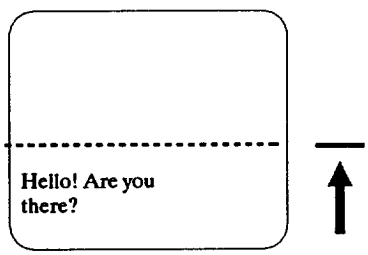

Typical Captions Display

Caption may be shown anywhere on the screen. (Shown here at bottom of screen.)

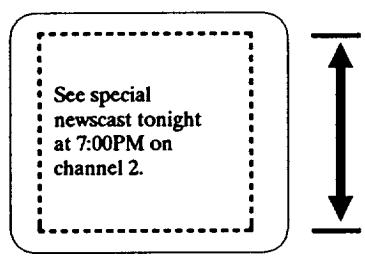

Typical Text Display

Fixed size text window. May be all black when no information is shown.

CH. BACKGROUND

Purpose

When you turn on your TV, the Channel/Time display shows the current channel, time (if set) and type of audio signal (STEREO, MONO or 2ND AUDIO/SAP). The CH. BACKGROUND feature allows you to show the numbers and letters on a small colored field which serves as the background. **NOTE:** This background will then also appear on the Mute display as well.

```
SETUP MENU

AUTO CH. SEARCH
CH. ADD/DEL
CH. LABELS
TUNING BAND
AUTO FINE TUNE
CLOCK SET
CAPTIONS
➔ CH. BACKGROUND          ON
```

Selecting Ch. Background

To Operate CH. BACKGROUND

1. CH. BACKGROUND should be selected if you followed the "Basic Menu Operation" given in the "On-Screen Menu" section.
2. One of two different selections is shown: ON or OFF.
3. Press ADJUST (ADJ) Left/Right to select the desired status.
4. The display disappears from the screen automatically in about 10 seconds, or you may press ENTER (ENT) to remove the display immediately.

SETUP MENU WITH AUXILIARY VIDEO SOURCE SELECTED

If one of the auxiliary video sources (VIDEO 1, VIDEO 2, VIDEO 3, S-VIDEO 1 or S-VIDEO 2) is selected for your main viewing picture, many of the SETUP MENU options will not appear when the SETUP MENU is accessed. The illustration below shows the SETUP MENU as it would appear. Only the CLOCK SET, CAPTIONS and CH. BACKGROUND options remain. Refer to the earlier discussions when setting these options.

```
SETUP MENU

→ CLOCK SET          --:--
  CAPTIONS
  CH. BACKGROUND
```

Setup Menu for Video and S-Video Sources

AUDIO MENU

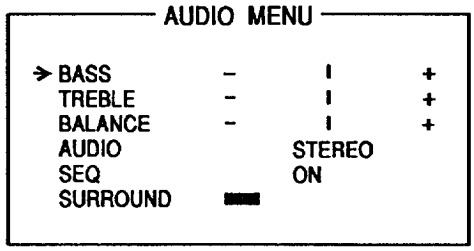

NOTE: All adjustments on the AUDIO MENU are optional. You do not have to use these features in order to use your TV.

GENERAL INFORMATION

Your TV is equipped to receive Multi-channel Television Sound (MTS) when available in your area. It can also receive a Second Audio Program (SAP), that is, a program broadcast with two audio portions (two languages). The following modes of operation are available.

STEREO

Directs the sound to the left and right speakers as supplied by the program source (broadcast TV station, VCR, etc.)

MONO (Monaural)

Directs the same sound to both left and right speakers even if the source being received is in stereo.

2ND AUDIO/SAP (Second Audio Program)

Directs the sound for the (SAP) Second Audio Program (typically a second language) to both the left and right speakers. SAP sound is always monaural.

SURROUND SOUND

Surround sound gives the effect of surrounding you in sound while listening to your TV. Surround speakers are used with the rear-channel Surround sound provided by the TV.

Surround sound is available in programs specially encoded for the rear-channel sound track. Many broadcast television programs, pre-recorded video tapes and video discs provide surround sound. Tapes and discs may provide a greater sensation of Surround sound than obtained from a TV broadcast.

NOTE: SURROUND sound is only available if a stereo signal is being received and you have previously selected STEREO using the AUDIO option or if STEREO is selected by default.

The level of Surround sound varies relative to the Surround information encoded into the program material. Some sources, especially if from a video tape, provide greater sensation of Surround sound than may be obtained from a standard TV broadcast.

AUTOMATIC MODE SELECTION

We recommend that you use the STEREO option. The TV will switch automatically between the STEREO and MONO modes dependent on the signal being received.

If you prefer SAP, use the 2ND AUDIO/SAP option. On those stations which broadcast two audio portions, you will hear the SAP (usually a second language). When the SAP broadcast ends, the TV switches automatically between STEREO and MONO modes. The TV switches back to 2ND AUDIO when the SAP broadcast resumes.

BASS

Use ADJUST (ADJ) Left/Right to adjust the amount of BASS (low-frequency level) in the sound. To decrease (–) BASS, press ADJUST (ADJ) Left. To increase (+) BASS, press ADJUST (ADJ) Right.

TREBLE

Use ADJUST (ADJ) Left/Right to adjust the amount of TREBLE (high-frequency level) in the sound. To decrease (–) TREBLE, press ADJUST (ADJ) Left. To increase (+) TREBLE, press ADJUST (ADJ) Right.

BALANCE

Use ADJUST (ADJ) Left/Right to shift the BALANCE of sound between the left and right speakers as indicated by the on-screen display. To increase the relative sound level in the Left (L) speaker, press ADJUST (ADJ) Left. To increase the relative sound level in the Right (R) speaker, press ADJUST (ADJ) Right.

AUDIO MENU

AUDIO

Use ADJUST (ADJ) Left/Right to select the speaker audio output mode. You may choose either STEREO, MONO or 2ND AUDIO/SAP. If current mode selection is not being received, the status display shows NOT AVAILABLE. If STEREO is selected but not received, the following line appears at the bottom of the menu:

THIS PROGRAM IS NOT IN STEREO

If 2ND AUDIO/SAP is selected but not received, the following line appears at the bottom of the menu:

THIS PROGRAM HAS NO 2ND AUDIO

In either of these cases, the Channel/Time display will always show what type of AUDIO signal is being received and has been selected default.

If you choose STEREO, you may want to enable Surround sound by using the SURROUND option.

NOTE: AUDIO mode selection is only available when one of the ANT/CABLE sources is selected for main picture viewing.

SEQ (Spatial Equalization)

Use ADJUST (ADJ) Left/Right to turn SEQ ON or OFF. SEQ improves tonal balance and increases apparent stereo separation to produce a spacious and more natural sound. Music and sounds appear to emanate from points outside the television set, while dialogue is localized within the picture.

SEQ is only available if a stereo signal is being received and you have previously selected STEREO using the AUDIO option or if STEREO is selected by default.

If no stereo signal is being received, the words NOT AVAILABLE appear next to SEQ, and the following line appears at the bottom of the menu:

THIS PROGRAM IS NOT IN STEREO

If your AUDIO selection is either MONO or 2ND AUDIO/SAP, the words NOT AVAILABLE appear next to SEQ and one of the following lines appear at the bottom of the menu:

MONO HAS BEEN SELECTED

2ND AUDIO HAS BEEN SELECTED

Some weak or nonstandard signals may not be suitable for SEQ, which may make imperfections in the audio transmission more obvious. Turn SEQ off if this condition exists.

NOTE: If SEQ is available, you can turn SEQ ON or OFF directly by pressing SEQ on the remote control.

SURROUND

Use ADJUST (ADJ) Left/Right to adjust the level of Surround sound you wish to obtain. To decrease (–) Surround sound, press ADJUST (ADJ) Left. To increase (+) Surround sound, press ADJUST (ADJ) Right.

SURROUND sound is only available if a stereo signal is being received and you have previously selected STEREO using the AUDIO option or if STEREO is selected by default.

When SURROUND is activated, "SURROUND SPEAKERS REQUIRED" appears at the bottom of the menu. This is a reminder that surround sound is only available when you have optional surround speakers connected to the SURROUND SPEAKER jack. The TV's internal speakers do not produce surround sound.

If no stereo signal is being received, the words NOT AVAILABLE appear next to SURROUND, and the following line appears at the bottom of the menu:

THIS PROGRAM IS NOT IN STEREO

If your AUDIO selection is either MONO or 2ND AUDIO/SAP, the words NOT AVAILABLE appear next to SURROUND and one of the following lines appear at the bottom of the menu:

MONO HAS BEEN SELECTED

2ND AUDIO HAS BEEN SELECTED

NOTES:

1. Continuously pressing ADJ Left automatically turns Surround speakers OFF.
2. If the current program is not in stereo, you will not be able to change the SURROUND option. The status display shows THIS PROGRAM IS NOT IN STEREO.
3. If Surround speakers are not used, set SURROUND option to OFF for optimum stereo sound reproduction.
4. If you are in the SURROUND menu option and press MUTE on the remote control, only the Surround speakers are muted.

AUDIO MENU

AUDIO SELECTION CONSIDERATIONS

The last line of the Channel/Time display shows the current audio heard. The display is shown each time you turn the TV ON, change channels, or press ENTER. The audio heard depends on the following:

- AUDIO mode selected on AUDIO MENU: STEREO, MONO or 2ND AUDIO/SAP.
- Audio signal being received.
- Whether SEQ is ON or OFF.

NOTES:

- Your AUDIO mode selection can override the type of audio heard. For example, if you select MONO, you will always hear monaural sound even if the signal received is stereo.
- If one of the auxiliary video sources (Video 1/2 or S-Video 1) is selected for the main picture source, the Channel/Time display will not show an audio mode except to show whether or not SEQ is turned on.

CH 2
10:56
STEREO

STEREO selected using the AUDIO option on the AUDIO Menu **and** a stereo signal is received; you will hear stereo sound. The Channel/ Time display shows STEREO.

CH 2
10:56
MONO

MONO selected using the AUDIO option on the AUDIO Menu; you will hear monaural sound regardless of the signal actually received. The Channel/ Time display shows MONO.

CH 2
10:56
SEQ

STEREO selected using the AUDIO option on the AUDIO Menu, a stereo signal is received and SEQ is turned ON, you will hear SEQ stereo sound. The Channel/Time display shows SEQ.

CH 2
10:56
SAP

SAP selected using the AUDIO option on the AUDIO Menu **and** a SAP signal is received; you will hear the SAP audio. The Channel/Time display shows SAP.

If a SAP signal is not received, the audio heard will be whatever is being received. The Channel/Time display shows what type of signal is being received.

Audio Heard For Different Audio Mode Options

AUDIO Selected	Signal Received	Audio Heard, SEQ OFF	Audio Heard, SEQ ON
STEREO	Stereo Stereo and SAP Monaural and SAP Monaural	Stereo Stereo Monaural Monaural	SEQ Stereo SEQ Stereo Monaural Monaural
MONO	Stereo Stereo and SAP Monaural and SAP Monaural	Monaural Monaural Monaural Monaural	Monaural Monaural Monaural Monaural
2ND AUDIO/SAP	Stereo Stereo and SAP Monaural and SAP Monaural	Stereo 2nd Audio 2nd Audio Monaural	SEQ Stereo 2nd Audio 2nd Audio Monaural

* For VIDEO and S-VIDEO Sources, the signal being received is assumed to be stereo.

VIDEO MENU

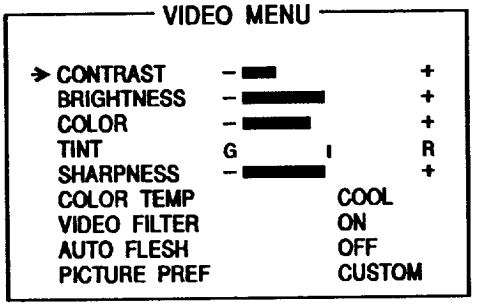

GENERAL INFORMATION

All adjustments on the VIDEO MENU are optional. You do not have to use these features in order to use your TV.

CONTRAST

Adjusts the overall contrast and color level of the picture.

If the light areas in the picture are overly bright and some of the highlight details are missing, press ADJUST (ADJ) Left until the highlights are restored.

If the picture is grayish and lacks contrast and sparkle, press ADJUST (ADJ) Right until you reach the CONTRAST level you prefer.

BRIGHTNESS

Adjusts the brightness level of black areas in the picture.

If the black areas are too light, press ADJUST (ADJ) Left until you reach the BRIGHTNESS level you prefer.

If the black areas in the picture are too dark and show little detail, press ADJUST (ADJ) Right until you reach the BRIGHTNESS level you prefer.

COLOR

Adjusts the intensity of the colors in the picture.

If all the colors seem too vivid or intense, press ADJUST (ADJ) Left to decrease the COLOR intensity.

If all the colors seem faded or washed out, press ADJUST (ADJ) Right to increase the COLOR intensity.

TINT

Adjusts the color of the flesh tones.

If the flesh tones are too red or purple, press ADJUST (ADJ) Left until you reach the desired flesh tones.

If the flesh tones are green or have a greenish TINT, press ADJUST (ADJ) Right until you reach the desired flesh tones.

SHARPNESS

Adjusts the clarity for the clearest picture.

If the picture is too "grainy" and vertical edges show multiple lines on the right side, press ADJUST (ADJ) Left to obtain the desired SHARPNESS.

If the picture is too "soft" and vertical edges are fuzzy, press ADJUST (ADJ) Right to increase the SHARPNESS.

COLOR TEMP

Allows you to change the "color temperature" or picture white balance between cooler natural whites and warmer (red) colors. To use COLOR TEMP, press ADJ until either WARM or COOL shows in the display.

VIDEO FILTER

The VIDEO FILTER reduces video "noise" or interference in dark picture areas while retaining detail and sharpness in bright areas, resulting in overall clearer pictures.

Select VIDEO FILTER from the VIDEO Menu

To turn the VIDEO FILTER ON, press ADJUST (ADJ) until the word ON shows in the display. To turn the VIDEO FILTER OFF, press ADJUST (ADJ) until OFF shows in the display.

AUTO FLESH

Automatically maintains natural skin tones under changing scene and video source conditions. To turn the AUTO FLESH ON, press ADJUST (ADJ) until the word ON shows in the display. To turn the AUTO FLESH OFF, press ADJUST (ADJ) until OFF shows in the display.

PICTURE PREF (Preference)

Lets you decide if you want to use your own CUSTOM video settings, the factory PRESET video settings, or the THEATER option.

Press ADJUST (ADJ) Left/Right to obtain the desired setting.

If the factory PRESET or THEATER setting is selected, any adjustment made to the VIDEO Menu options from this point, automatically changes the PICTURE PREF setting to CUSTOM, and saves your current video settings in the CUSTOM mode.

PROGRAMMING THE REMOTE CONTROL

INTRODUCTION

Before using your new remote control, it must be programmed to recognize the brands of equipment it will be used to operate. If you are using a Zenith TV, Zenith VHS/VCR or a Zenith cable-TV decoder, it has already been programmed for you. Otherwise, follow the steps below.

NOTE: The remote control can only be used to operate one VCR, one TV and one cable-TV decoder at a time. If you program the remote control to operate a TV that is not a Zenith, it will no longer operate your Zenith TV.

1. Find the code that corresponds to each brand and type of equipment you are going to operate. Refer to Tables 1, 2 and 3.

   For example, if you were programming the remote for use with a Zenith TV, you would look up "Zenith" in "Table 1.", and find code "101."

   Write the brand codes for your equipment on the following lines. **Keep this operating guide for future reference.**

   TV CODE: _____

   CABLE CODE: _____

   VCR CODE: _____

2. Press MODE repeatedly to select the desired TV, VCR or CABLE operating mode for the remote.
3. Press LEARN for about 5 seconds until the MODE indicator lights for the selected TV, VCR or CABLE mode of operation.
4. Enter the proper brand code number determined in Step 1.
5. Press LEARN. All three mode indicators should light briefly, then turn off to indicate the brand code has been programmed.
6. If all three mode indicators fail to light briefly, an error has occurred. Repeat Steps 2-5 to try again.
7. Repeat steps 2 - 5 to program the remote for the other equipment you are using.

NOTE: CABLE mode can be programmed to operate a second TV or second VCR, if desired.

When batteries are removed: It will be necessary to reprogram the proper VCR and cable-TV decoder codes.

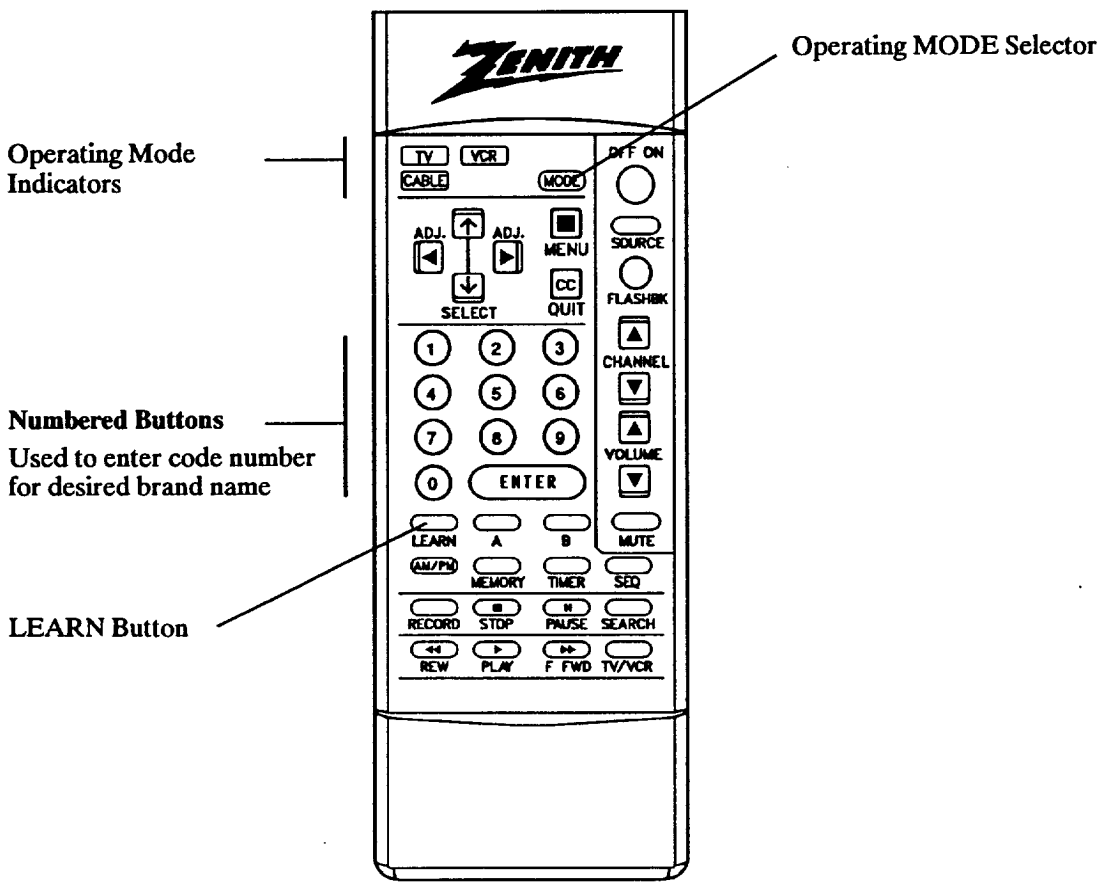

MBR3420

PROGRAMMING THE REMOTE CONTROL

TV, VCR AND CABLE-TV OPERATING CODES

Table 1. TV Codes by Brand

TV Brand Name	Code	TV Brand Name	Code
Admiral	116	Montgomery Ward	119
Admiral	121	Montgomery Ward	121
Akai	104	Montgomery Ward	130
Amark	103	NEC	104
AOC	104	NEC	119
Bell & Howell	121	Panasonic	106
Centurion	119	Panasonic	107
Coronado	103	Philco	103
Curtis Mathes	116	Philco	104
Curtis Mathes	119	Philco	112
Curtis Mathes	121	Philco	113
Daytron	119	Philips	112
Emerson	103	Philips	113
Emerson	104	Pioneer	135
Emerson	123	Portland	103
Emerson	124	Quasar	106
Emerson	131	Quasar	107
Emerson	136	Realistic	105
Fisher	109	Realistic	123
Fisher	118	Realistic	124
General Electric	106	RCA	104
General Electric	107	RCA	116
General Electric	114	RCA	126
General Electric	116	Sampo	119
Goldstar	103	Samsung	103
Goldstar	104	Samsung	119
Goldstar	119	Samsung	134
Hitachi	102	Sanyo	108
Hitachi	103	Sanyo	109
Hitachi	129	Sanyo	118
JVC	125	Scott	119
JVC	132	Sears	103
J.C. Penney	104	Sears	108
J.C. Penney	110	Sears	109
J.C. Penney	114	Sears	110
J.C. Penney	117	Sears	111
J.C. Penney	119	Sears	118
KMC	103	Sears	134
KTV	103	Sharp	103
KTV	104	Sharp	105
Lodgenet	121	Sharp	122
Logik	121	Sharp	133
LXI	133	Sharp	137
LXI	137	Sony	115
Magnavox	103	Sylvania	112
Magnavox	112	Sylvania	113
Magnavox	113	Sylvania	117
Magnavox	119	Sylvania	119
Magnavox	127	Sylvania	127
Magnavox	128	Sylvania	128
Majestic	121	Tatung	106
Marantz	104	Teknika	103
Marantz	120	Teknika	112
Memorex	121	Teknika	121
MGA/Mitsubishi	104	Teknika	124
MGA/Mitsubishi	119	Telerent	103
MGA/Mitsubishi	120	Telerent	121
MGA/Mitsubishi	130	Toshiba	110
Montgomery Ward	103	Toshiba	111
Montgomery Ward	104	Toshiba	134
Montgomery Ward	105	Yorx	119
Montgomery Ward	113	Zenith	101
Montgomery Ward	114		

Table 2. VCR Codes by Brand

VCR Brand Name	Code	VCR Brand Name	Code
Akai	223	Pentax	215
Audio Dynamics	202	Philco	214
Audio Dynamics	218	Philips	214
Broksonic	221	Philips	227
Canon	214	Pioneer	210
Citizen	209	Pioneer	215
Craig	212	Pioneer Laser Disk	228
Curtis Mathes	214	Quasar	214
Curtis Mathes	216	RCA	215
DBX	202	RCA	216
DBX	218	RCA	220
Emerson	203	RCA	227
Emerson	221	Realistic	206
Emerson	223	Realistic	208
Emerson	226	Realistic	212
Emerson	233	Realistic	214
Emerson	235	Realistic	231
Fisher	211	Samsung	220
Fisher	212	Samsung	230
Fisher	213	Sanyo	206
Funai	231	Sanyo	212
General Electric	214	Scott	204
General Electric	216	Scott	205
General Electric	220	Scott	233
Goldstar	209	Sears	206
Hitachi	215	Sears	209
Instant Replay	214	Sears	211
Instant Replay	227	Sears	212
JVC	202	Sears	215
JVC	225	Sharp	208
J.C. Penney	214	Sony VHS	232
J.C. Penney	218	Sony Video 8	217
J.C. Penney	227	Sylvania	207
Kenwood	202	Sylvania	214
Magnavox	207	Sylvania	227
Magnavox	214	Symphonic	231
Marantz	207	Tashiko	209
Marantz	218	Tatung	202
Marta	209	Teac	202
Memorex	212	Teac	231
Memorex	214	Teknika	234
Memorex	231	Toshiba	205
MGA/Mitsubishi	204	Toshiba	215
MGA/Mitsubishi	222	Vector Research	204
Montgomery Ward	208	Vector Research	218
Montgomery Ward	214	Yamaha	202
Montgomery Ward	219	Yamaha	218
NEC	202	Zenith VHS	201
NEC	218	Zenith VHS	225
Panasonic	214	Zenith VHS	229

Table 3. Cable Decoder Codes by Brand

Cable Decoder Brand Name	Code	Cable Decoder Brand Name	Code
Drake Satellite	312	Pioneer	315
Drake Satellite	330	Regency	329
Gemini	305	Samsung	335
Gemini	331	Scientific Atlanta	316
General Instrument	305	Scientific Atlanta	323
General Instrument	306	Scientific Atlanta	336
Hamlin	302	Sprucer (Panasonic)	313
Hamlin	303	Standard Components	335
Jerrold	304	STS Satellite	324
Jerrold	307	Telecaption 4000	325
Jerrold	308	Tocom	317
Jerrold	309	Tocom VIP	318
Jerrold	310	Toshiba	322
Kale Vision	335	Toshiba Satellite	319
Macom	314	Zenith	301
Macom	321	Zenith	322
Macom Satellite	322	Zenith AV3000	327
Magnavox	334	Zenith Satellite	312
NSC	335	Zenith Satellite	330
Oak	311	Zenith Satellite	328
Oak	332	Zenith Laser Disk	326
Panasonic	313		
Panasonic	320		
Paragon (Zenith)	333		

MAINTENANCE AND TROUBLESHOOTING

CARING FOR YOUR TV

Your TV will look better, have a longer life and perform better if you care for it properly.

First check to see that the TV is off. For added safety, unplug the TV from the power outlet.

Picture Glass Cleaning

The picture tube face attracts dust particles and should be cleaned regularly. To clean the face, spray a small amount of glass cleaner on a cleaning cloth and wipe the picture tube glass face until clean. Repeat if necessary.

To delay new dust accumulation, wet a soft cloth in lukewarm water in which a little fabric softener or Ivory dishwashing detergent has been mixed. Wring the cloth almost dry. Wipe the glass face. Make sure no drops of moisture are squeezed onto the glass. Do not wipe the glass dry. Allow the glass to air-dry before you turn the TV on again.

Cabinet Care

Non-Wood Cabinet or Cabinet Components.

Moisten a soft cloth with a mild soap solution or Ivory dishwashing detergent. Wipe the surface with a damp cloth. Then rinse the cloth in clean water and wipe the surface again. Allow the TV to air-dry before turning it on.

Wood Cabinets or Cabinet Components.

Use any good furniture cleaner and polish. Regular care will help preserve the finish.

EXTENDED ABSENCE

Before an extended absence (such as a vacation) you may want to unplug the power cord from the electrical wall outlet. This will protect the TV from possible damage from lightning or power line surges. If you have an outdoor antenna, you may also want to disconnect the antenna lead-in wires on the back of the TV.

NOTE: If you unplug your TV, you will have to reset the clock to the current time.

TV PICTURE INTERFERENCE

Your TV picture may be affected by interference caused by one or a number of factors. These include:

Nearby Automobile Ignition, Electrical Appliances, etc. Which causes a speckled, streaked picture. This is most noticeable in weak signal areas.

Snow in Picture Caused by insufficient signal. Usually caused by the TV being located too far from the TV station or by an improper antenna installation.

Ghosts or Reflections Caused by signals being reflected from surrounding buildings, water tanks, or other high structures.

Radio Signal Police, amateur or CB radio transmitters may cause interference.

These interference problems can often be corrected through the use of a better antenna, signal amplifiers, or various filter devices. See your TV dealer for additional information, and available TV accessories.

MAINTENANCE AND TROUBLESHOOTING

BEFORE CALLING FOR SERVICE

Check these items and see if you can correct the trouble by changing the adjustment of a control or the setting of a switch.

By making these simple checks before calling for service, you may save time and money.

Problem	Try This
Picture OK. Poor sound.	Re-orient antenna. Check for local interference. Try another channel – possible station trouble? Check AUTO FINE TUNE and TUNING BAND options in SETUP Menu.
Sound OK. Poor picture.	Re-orient antenna. Adjust VIDEO Menu options with PICTURE PREF in CUSTOM mode. Try another channel – station trouble? Trouble with cable-TV system?
No picture or sound.	Is TV on? Is there power in wall outlet? Is TV plugged in? Is antenna hooked up? Is cable hooked up? Check with your cable company. Check auxiliary audio/video equipment. Check channel selection. Check TUNING BAND and AUTO FINE TUNE option in SETUP Menu.
Picture blurred, ghost in picture, or distorted	Check antenna or cable hook up for broken wires? Possible station trouble – try another channel. Check for local interference.
No color, or poor color.	Check antenna or cable hook up. Adjust VIDEO menu options with PICTURE PREF in the CUSTOM mode. Is it a color program?
No sound.	Check VOLUME (VOL) setting. Check MUTE button operation on remote control, if provided.
Cannot select certain channels.	Channels may be skipped in CH. ADD/DEL menu option. Check TUNING BAND and AUTO FINE TUNE menu option.
No picture or sound when Video Source is selected.	Is video component hooked up properly? Are wires connected to VIDEO 1/2 jacks on connection center?
Remote control does not work.	Are batteries okay? Is TV turned ON? Is TV plugged in? Is remote in the TV mode?
No closed captions.	Are captions available? Is CAPTION 1 or CAPTION 2 selected using the CAPTIONS option on the setup menu?
Black box covers most of screen.	Is TEXT 1 or TEXT 2 selected using the CAPTIONS option on the SETUP Menu? Text information may not be available.

Always request that your technician use only genuine Zenith exact replacement parts for continued Quality and Safety performance. Keep your Zenith ALL Zenith.

NOTE: If your TV fails to respond to the PICTURE PREF. selection, or to any other menu selection, you must reset the TV. Simply disconnect it from AC power by unplugging the AC power cord from the power outlet. Wait a few minutes, then plug the TV back into the power outlet. You may have to set the clock to the proper time.

VCR MODE CHART 1. OUTPUT TO TV FROM ANTENNA OUT JACK ON VCR

The operating mode of your VCR determines what type of a program source is provided, and whether the audio is stereo or monaural. Use this flow chart to determine the operating status of your VCR, so that you can select the proper viewing source and channel on your TV. Select the VCR output channel (3 or 4) on your TV to view tapes or to see programs selected by using the channel tuner in the VCR.

During tape playback, we recommend you use the AUDIO and VIDEO output jacks on your VCR for improved performance.

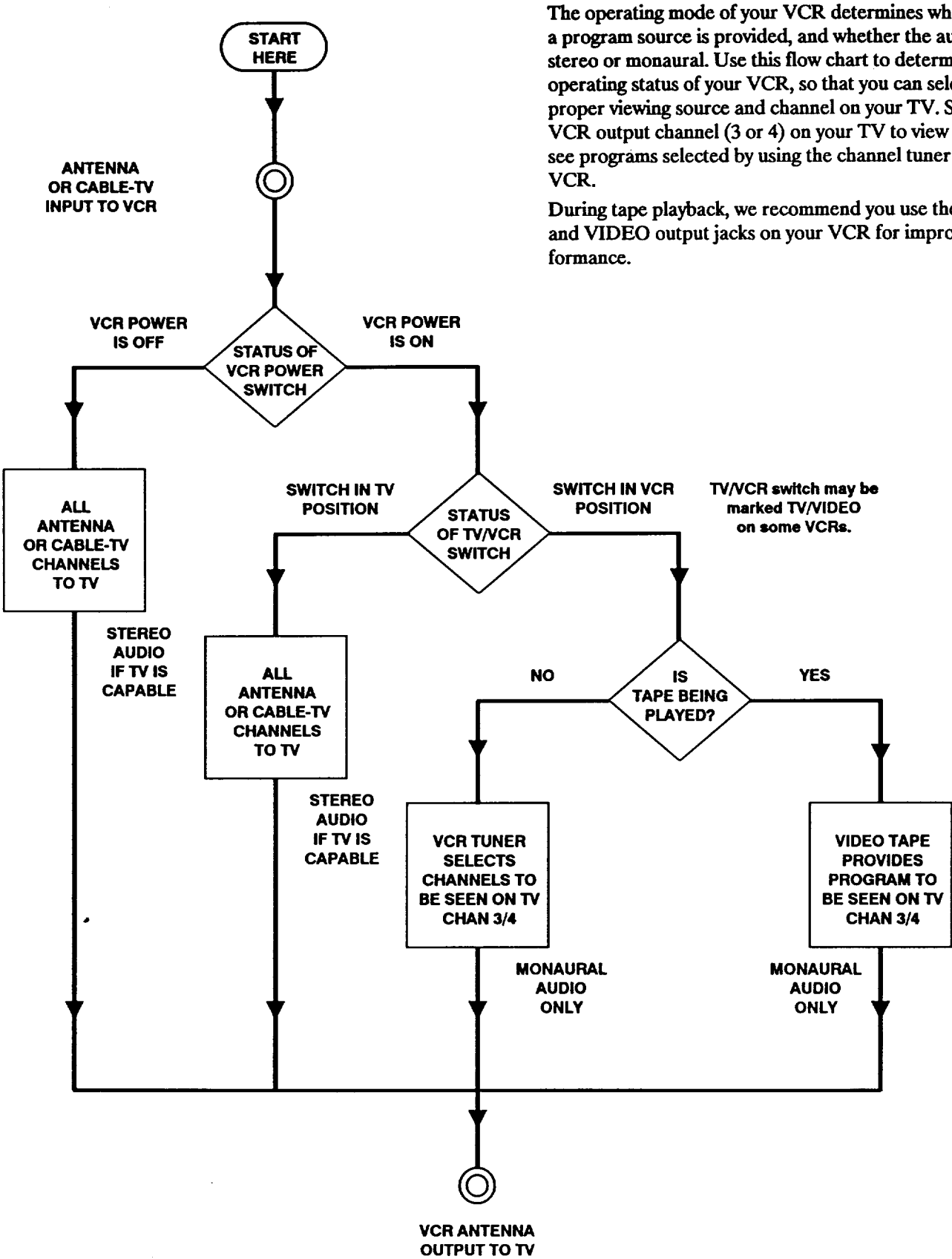

VCR MODE CHART 2. OUTPUT TO TV FROM AUDIO/VIDEO JACKS ON VCR

The operating mode of your VCR determines what type of program source is provided, and whether the audio is stereo or monaural. Use this flow chart to determine the operating status of your VCR, so that you know when to select the VCR (or auxiliary) source on your TV.

Use the LEFT and RIGHT AUDIO output jacks on the VCR to get stereo sound. Select STEREO audio mode of operation for the TV by using the options on the AUDIO Menu of the TV. You must use the VIDEO output when the LEFT and RIGHT AUDIO outputs are used.

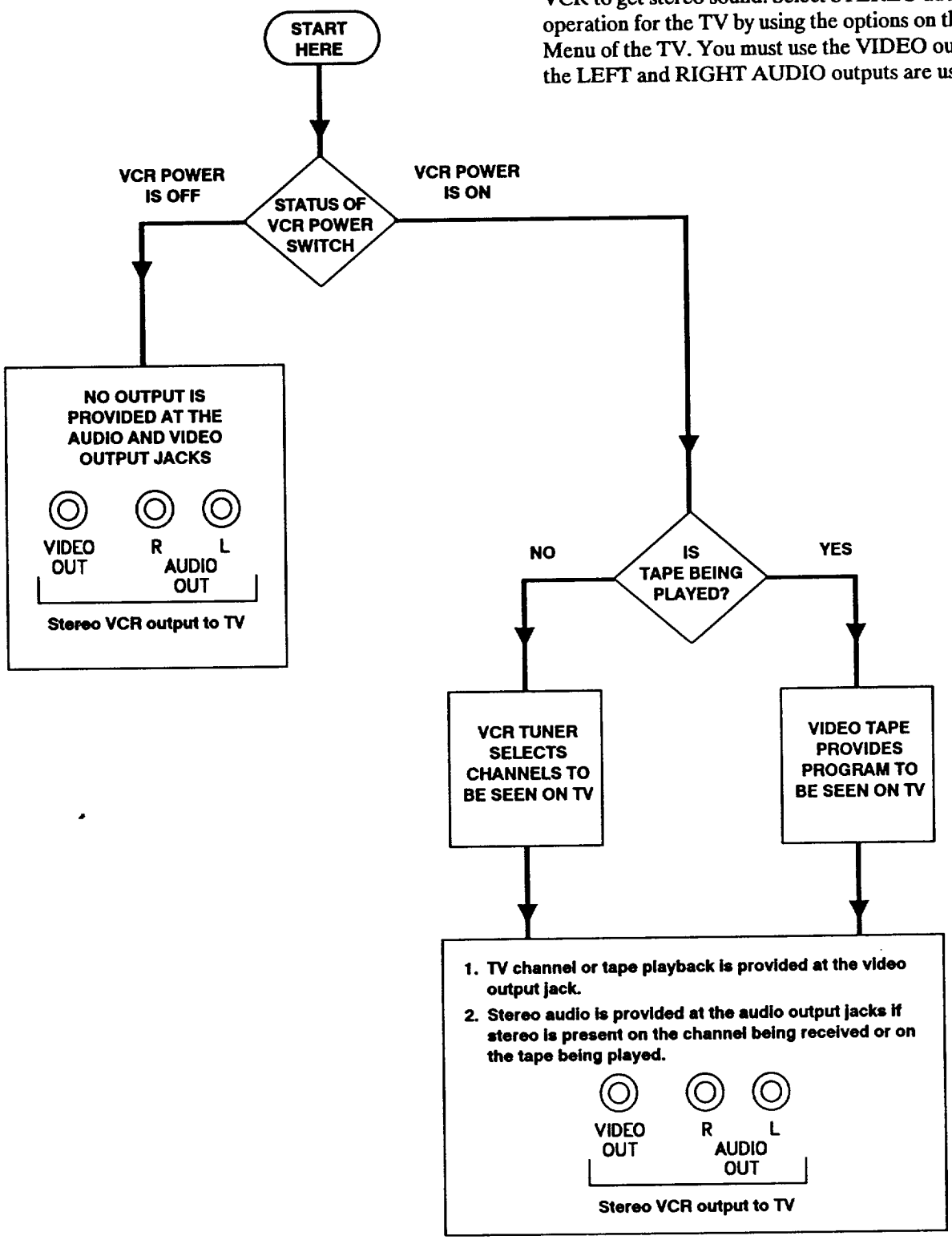

PRODUCT REGISTRATION CARD

You could win a full refund on your new Zenith product.

Look for the Product Registration Card on your new video product.

Each month a drawing is held by Zenith from the completed Product Registration Cards received during the preceding month. Zenith will reimburse the winner for the full purchase price of the product purchased.

In order to participate, simply complete and return the Product Registration Card at once, even if you choose not to complete the information and interests portion of the questionnaire.

The odds of winning the free drawing described above, depend on the number of participants. Free drawing offer is void in Canada and other places where restricted or prohibited by law. Offer is void for Hotel/Motel and Institutional models. Rental models are not eligible.

Product Card lost or misplaced?

The Product Registration Card furnished with your video product is pre-printed with its Model and Serial numbers. Please fill out the card and mail it at your earliest convenience. It is imperative that Zenith know how to reach you promptly if we discover a safety problem that would affect you. If the original card has been lost or misplaced, you may use the replacement card provided below. Either card will qualify you for the free drawing, but you are limited to only one entry in the drawing. Complete the card, place it in an envelope and mail it to:

Zenith Electronics Corporation
P. O. Box 173257
Denver, CO 80217-3257

Use the replacement Product Registration Card only if the original card has been misplaced or lost.

PHOTOCOPY AND CUT ALONG DASHED LINE

Zenith Product Registration Card

H5Z01-01

(1) Please Print Clearly or Type

1. ☐ Mr. 2. ☐ Mrs. 3. ☐ Ms. 4. ☐ Miss

(2) Area Code Telephone

First Name Initial Last Name

Street Apt. No.

City

State Zip Code

(3) Date of Purchase

Mo. Day Yr.

MODEL NUMBER	
Copy Numbers Here From Label on Set	
SERIAL NUMBER	

Please record the model number and serial number from the sticker on the back of your set.

RECOMMENDED ACCESSORIES FOR YOUR TELEVISION

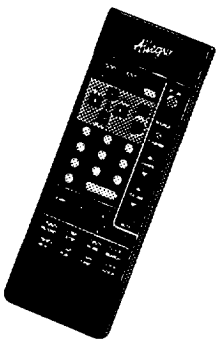

MBC400P 3 FUNCTION MULTI-BRAND REMOTE CONTROL (2 lbs)

Combining three remotes into one has never been easier. Operate your TV, VCR and cable converter with one remote control.

- Electronic mode switching
- Easy set-up: simply depress the "Learn" key for 5 seconds and enter the three digit pre-programmed code
- Three LED mode indicators
- Operate on-screen menus and displays
- Ideal replacement for lost or broken remotes

ONLY $29.95
Plus shipping and handling

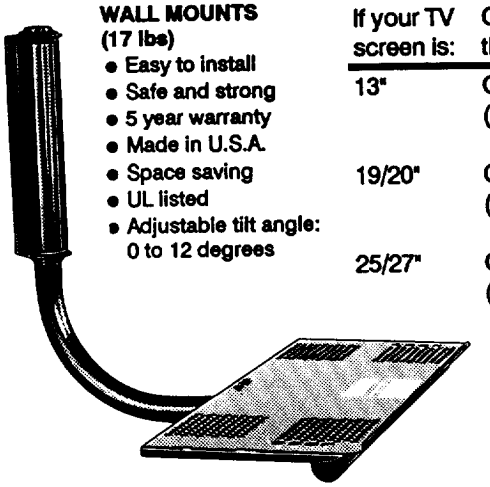

WALL MOUNTS (17 lbs)

- Easy to install
- Safe and strong
- 5 year warranty
- Made in U.S.A.
- Space saving
- UL listed
- Adjustable tilt angle: 0 to 12 degrees

If your TV screen is:	Order this model	
13"	CWM013 (17 lbs)	ONLY $69.95
19/20"	CWM020 (17 lbs)	ONLY $89.95
25/27"	CWM027 (17 lbs)	ONLY $99.95

Plus shipping and handling

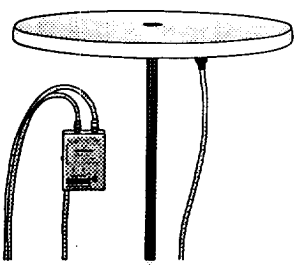

ATS800 OMNI-STAR AMPLIFIED UHF/VHF ANTENNA (7 lbs)

- Omni directional amplified UHF/VHF antenna
- Attic or roof mount
- Built-in amplifier boosts TV signal strength up to 6 times on VHF and 9 times on UHF
- Includes: 50 ft. and 6 ft. coaxial cable with connectors, U/V band separator, mounting bracket and hardware. (Mast and mast mount are not included.)

ONLY $129.95
Plus shipping and handling

ATS400 DELUXE 75 OHM INDOOR ANTENNA (3 lbs)

- 75 ohm all channel UHF/VHF/FM antenna
- High tech black styling
- Fully adjustable telescoping VHF elements
- 14 position fine tuning control
- Double isolated circuit for added protection
- Rotating UHF fine tuning element
- Rubber base feet for added protection and stability

ONLY $59.95
Plus shipping and handling

Special BONUS for orders over $100.00! Receive a FREE Allegro gift valued at $10.00!

Order Form — **Photocopy Page and Detatch Here**

To take advantage of this exciting offer, please fill out this card and return a photocopy to:

Attn: Accessory Offers
Zenith Video Tech Corporation
1900 N. Austin Avenue
Chicago, Illinois 60639

Charge card customers, to speed your order, call toll free 1-800-255-6790

Check payment method you prefer:

☐ Check or money order (made payable to Zenith Video Tech)

☐ Visa ☐ Mastercard

Account Number

Exp. date _____

Signature _____

Item Number	Description	Quantity	Price Per Item	Total Price	Ship Weight

Sales Tax: Please add your state sales tax if you live in one of the following states.

CA 7 3/4%, GA 4%, IL 6 3/4%, KS 4.9%, KY 6%, ME 6%, PA 6%, RI 7%, TX 7 3/4%, VA 4 1/2%, WA 6 1/2%

Subtotal		Total Ship Weight
State Sales Tax		____ lbs
Ship Charges (See Chart)		
Total Amount of Order		

Shipping Information

Total (Lbs) Ship weight	Charge
1 - 5 lbs	$4.50
6 - 10 lbs	$5.35
11 - 15 lbs	$7.00
16 - 20 lbs	$8.75
26 + lbs	$10.45

Ship to:

Telephone _____

Name _____

Address _____

Apt # _____ City _____

State _____ Zip Code _____

PLEASE ALLOW 3-4 WEEKS FOR DELIVERY. THANK YOU!

To receive information on other fine accessory products like those above, please take a moment to complete the following:

Television Model # (from back of set) _____

Television Serial # (from back of set) _____

Mo. ___ Day. ___ Yr. ___ (Approx. date of purchase)

NOTE: Price and availability subject to change.

TVACCES1

YOUR ZENITH WARRANTY

Consumer Protection Plan for Zenith TV

Welcome into the Zenith family! We believe that you will be pleased with your new Zenith Color TV. Please read this Consumer Protection Plan carefully. It is a "LIMITED WARRANTY" as defined under Federal Law. This warranty gives you specific legal rights, and you may also have other rights that vary from state to state within the U.S.A.

Zenith's Responsibility

Service Labor – During a period of 90 days from effective warranty date, Zenith will pay for service labor by a U.S. or Canadian distributor-approved Zenith service center when needed as a result of manufacturing defects.

Parts – New or remanufactured replacements for factory-defective parts will be supplied by a U.S. or Canadian distributor-approved service center for one year from effective warranty date (color picture tube – two years). Such replacement parts are warranted for the remaining portion of the original warranty period.

Home Service – Warranty service for 19" diagonal (U.S.A.) or larger screen size models is provided in the home.

Not Covered – This warranty covers manufacturing defects and does not cover installation, adjustment of customer controls in the home, installation or repair of home antenna systems, cable converters or cable company-supplied equipment; it also does not cover damage due to misuse, abuse, negligence, acts of God or other causes beyond the control of Zenith. Any alteration of the product after manufacture voids this warranty in its entirety.

Owner's Responsibility

Effective Warranty Date – Warranty begins on the date of original consumer installation. For your convenience, keep the dealers dated bill of sale or delivery ticket as evidence of the purchase date.

Operating Guide – Read your Operating Guide carefully so that you will understand the operation of your set and how to adjust the customer controls.

Carry-In Service – Models under 19" diagonal (U.S.A.) screen size must be taken to a distributor-approved Zenith service center for warranty service and must be picked up by the owner.

Antenna – Reception problems caused by inadequate home antennas or faulty antenna connections are the owner's responsibility.

Important: Product Registration – Please fill out and mail your Product Registration Card. It is imperative that Zenith know how to reach you promptly if we should discover a safety problem that could affect you.

Warranty Service – For warranty service information, contact your Zenith dealer preferably, or any distributor-approved Zenith service center. Parts and service labor that are Zenith's responsibility (see above) will be provided without charge. Other service is at the owner's expense. If you have any problem in obtaining satisfactory warranty service, write:

Zenith Electronics Corporation
Customer Service Department
1900 N. Austin Avenue
Chicago, Illinois 60639-5079
Telephone: (312) 745-5152
Mon-Fri, 8:00 a.m. - 4:30 p.m. Central Time

NOTE: Before you ask for Warranty service, check the Operating Guide section entitled, "MAINTENANCE AND TROUBLESHOOTING." It may be possible to avoid a service call.

ZENITH ELECTRONICS CORPORATION
1000 MILWAUKEE AVENUE
GLENVIEW, ILLINOIS 60025

Part No. 206-2580
Printed in U.S.A.
EP-EDCB